ShinMaywa

Submersible Trash Pumps

BHV401S

High Durability! Tough against sand lock employing vortex impeller!



- In combination with small size capacitor motor and light body, pump weight has been reduced to 60% against former model so that easy handling is achieved.
- Easy for assembly, disassembly and maintenance.
- Equipped with 3 terminal type thermal protector and high efficiency, high torque capacitor motor to prevent against motor burning by overload.
- Improved durability by employing double mechanical seal and oil seal.

Applications

- Dewatering spring water at construction site
- Water intake or drainage for agricultural purpose
- Drainage from basements or cable pits
- Temporary water supply and drainage at home, etc.



Standard Specifications

Discharge (mm)	Pump model	Rated output (kW)	Phase	Flow – Total head m³/min—m		No. of poles	Pump weight (kg)
				50Hz	60Hz		
50	BHV401S	0.4	Single Phase	0.1—8.0	0.1—8.0	2	10

Standard Accessories

- Cable [5m] ····· 1pc.
- Hose nipple ····· 1pc.

Dimensions

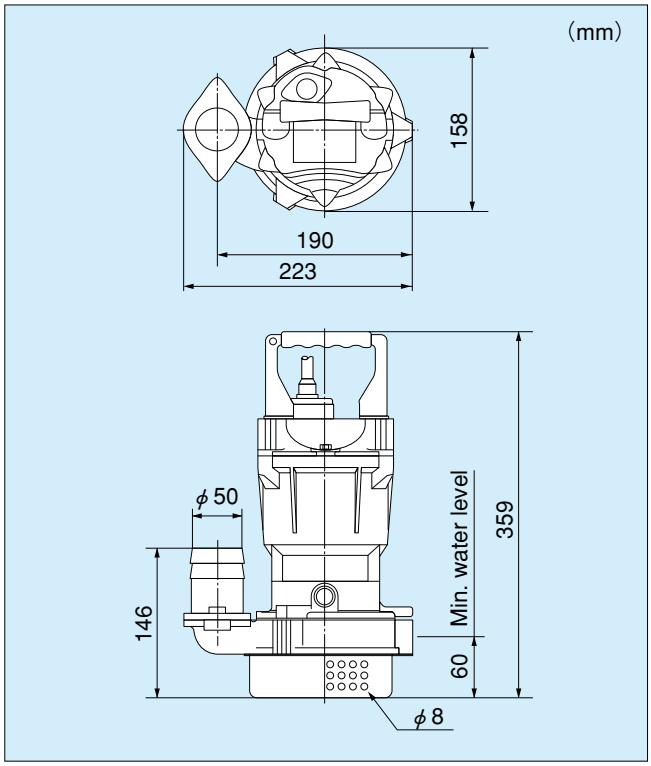

Performance Curves

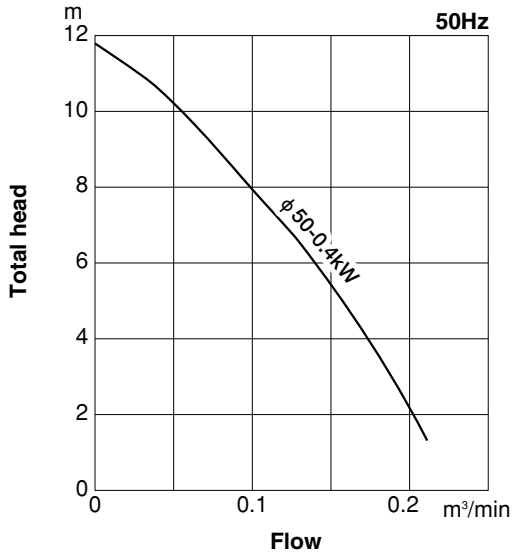

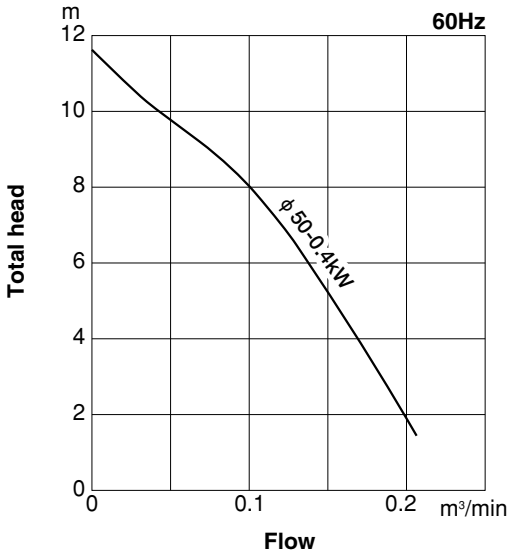

Specifications and dimensions are subject to change without notice.

ShinMaywa Industries, Ltd.

Global Sales Dept.
Sales & Marketing Dept., Fluid Div.
3-2-43, Shitte, Tsurumi-ku, Yokohama, 230-0003, Japan
Phone : +81-45-584-1322 Fax : +81-45-575-2286
E-mail : global.pump@shinmaywa.co.jp

ShinMaywa (Asia) Pte. Ltd.
8 Burn Road, #14-10 Trivex, Singapore 369977
Phone : +65-6224-0728
Fax : +65-6224-9678
E-mail : asia.ad@shinmaywa.com.sg

Thai ShinMaywa Co., Ltd.
199 Moo 12, Soi Petchakasem 120, Petchakasem Road,
Om-noi, Krathumban, Samutsakorn 74130 Thailand
Phone : +66-2-420-4712
Fax : +66-2-420-9863
E-mail : tsmc.fluid.sales@shinmaywa.co.jp

ShinMaywa (Shanghai) Trading Co., Ltd.
201107 Building 6, Youlejia City, Industrial Park, 333 Lane,
Zhujian Road Minhang, Shanghai, China
Phone : +86-21-5296-2966
Fax : +86-21-5296-2970
E-mail : shanghai@shinmaywa.co.jp

ShinMaywa (America), Ltd.

Head Quarters
10737 Gateway West, Suite 240,
El Paso, Texas 79935, U.S.A.
Phone : +1-915-594-9862
Fax : +1-915-594-9866
E-mail : info@shinmaywaamerica.com

North Carolina Branch
6135 Park South Drive, Suite 510
Charlotte, NC, 28210, U.S.A.
Phone : +1-704-945-7112
Fax : +1-704-945-7101
E-mail : pump@shinmaywaamerica.com

URL : https://www.shinmaywa.co.jp/america/index.html

ShinMaywa ONO PLANT
ISO 9001-0066539/ISO 14001-0066652