ShinMaywa

Submersible Residual Water Pump

BRL400S





- **Discharge down to 1-2 mm water level**
  BRL400S can start pumping when the minimum water level of 4mm or over and continues pumping down to 1-2 mm water level.

- **Reliable operation**
  Thanks to the top discharge flow-through structure, BRL400S can be operated continuously even the motor is in air.

- **Damage-free installation**
  The bottom part is made of synthetic rubber to avoid damage tanks or floor surfaces.

- **Two types of outlet**
  25mm discharge model with a check valve to lift and move the pump without spilling or losing suction.
  50mm discharge model transforms the pump into a regular dewatering pump.

- **Easy maintenance**
  BRL400s can be disassembled by removing three bolts.
  The impeller and pump housing are also easy to maintain.

Applications

- Dewatering residual water
  - Swimming pools,water tanks,wet floor
  - Basement,utility pits
  - Construction sites
- Dewatering rinse water
  - Factories,large tanks
  - Special purpose vehicles,etc.
- Removing sediments
  - Ponds for aquarium fishes,etc.

Standard Specifications

Discharge (mm)	Pump model	Phase	Rated output (kW)	Flow—Total head m³/min—m		No. of poles	Pump weight (kg)
				50Hz	60Hz		
25	BRL400S	Single	0.4	0.1—6	0.1—6	2	9.5
50				0.15—6	0.15—6		

Standard Accessories

- Cable [5m] ····· 1 pc.
- Check valve unit ····· 1 set (for 25mm discharge)
- Hose nipple ····· 1 pc. (for 50mm discharge)

Dimensions

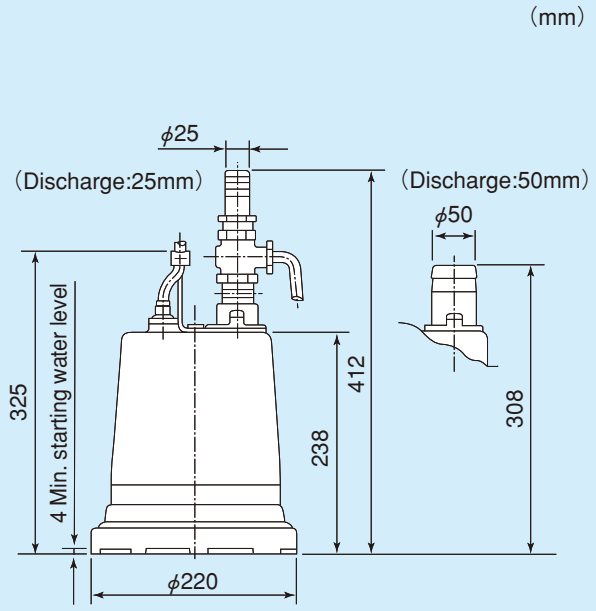

Performance Curves

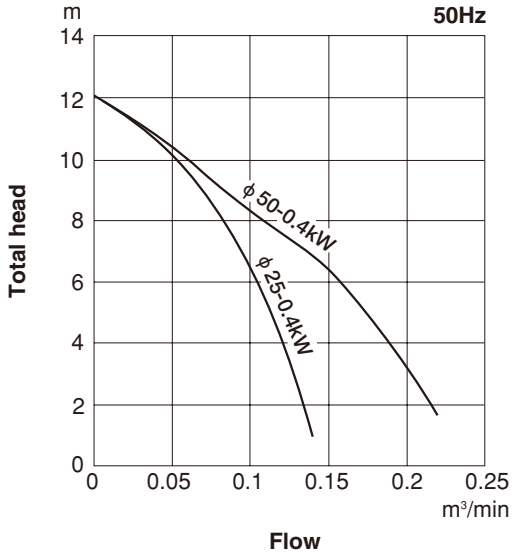

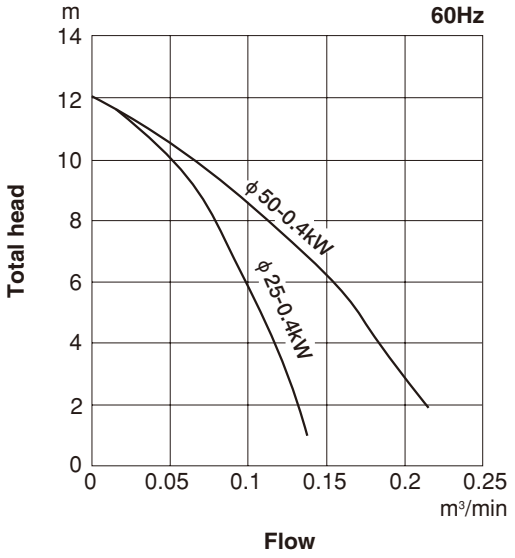

Specifications and dimensions are subject to change without notice.

ShinMaywa Industries, Ltd.

Sales & Marketing Dept., Fluid Div. 3-2-43, Shitte, Tsurumi-ku, Yokohama, 230-0003, Japan
Phone : +81-45-584-1322 Fax : +81-45-575-2286
E-mail : sales.eisui@shinmaywa.co.jp

ShinMaywa (America), Ltd.
10737 Gateway West, Suite 240,
El Paso, Texas 79935, U.S.A.
Phone : +1-915-594-9862
Fax : +1-915-594-9866
E-mail : info@shinmaywaamerica.com

ShinMaywa (Asia) Pte. Ltd.
8 Burn Road, #14-10 Trivex,
Singapore 369977
Phone : +65-6224-0728
Fax : +65-6224-9678
E-mail : asia.ad@shinmaywa.com.sg

ShinMaywa (Shanghai) Trading Co., Ltd.
201107 Building 6, Lane 333, Zhujian Road,
Minhang District, Shanghai, China
Phone : +86-21-5296-2966
Fax : +86-21-5296-2970
E-mail : shanghai@shinmaywa.co.jp

ShinMaywa ONO PLANT
ISO 9001(No.956445)/ISO 14001(No.771888)

http://www.shinmaywa.co.jp/english/products/pump.htm

'19. 2 Z-E116C Printed in Japan1.5 Ⓗ