ShinMaywa

Submersible Drainage Pumps
UNIVERSAL TYPE

BTR-S series

Light and Compact, yet Tough

The BTR-S series are SINGLE PHASE electric motor driven submersible dewatering pump. It is lightweight and compact, which means that it can be put to work quickly anywhere where water has to be pumped away.

Applications

- Ditches
- Small construction sites
- Manhole pits
- Basements

- **Cable:** Core wire prevents water penetration.
- **Motor:** Small, light weight and high efficiency.
- **Thermal protector (Auto-reset):** Automatically to prevent from overheating.
- **Shaft seal:** Double mechanical seal.
- **Pump housing:** Special synthetic rubber for rear liner and suction plate.
- **Impeller:** Vortex type impeller which creates large liquid flow path and so it has no trouble of impeller lock caused by sand or foreign objects, and no clearance adjustment is required at maintenance.
  Employing special urethane rubber with higher wear resistance.
- **Strainer:** Attached at suction side of the housing to prevent large foreign objects from entering, but big hole size.(7.5mm dia.)
- **Pump diameter:** Only 182mm. it is the smallest size among the same class.



BTR400S

■Performance

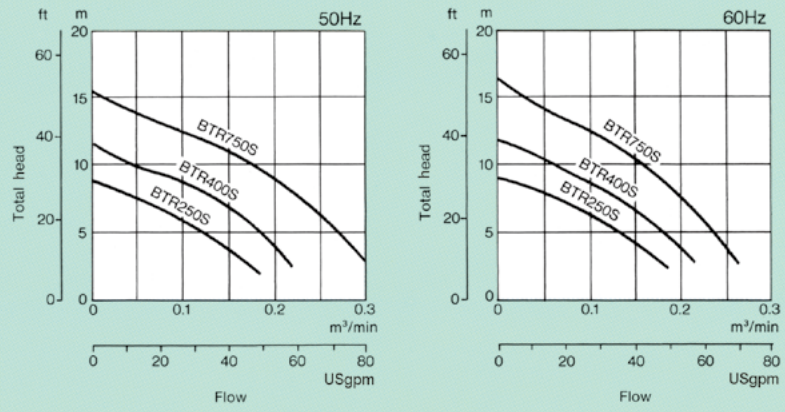

Dimensions

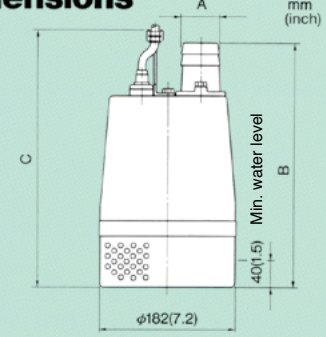

Pump model	A	B	C
BTR250S	40(1½)	314(12.4)	340(13.4)
BTR400S	50(2)	324(12.7)	
BTR750S		368(14.4)	384(15.1)

Standard Specifications

Discharge		Pump model	Phase	Rated output	Flow—Total head				No. of poles	Pump weight	
					m^3/min—m		USgpm—ft				
mm	inch			kW	50Hz	60Hz	50Hz	60Hz		kg	lbs
40	1½	BTR250S	Single	0.25	0.1—6.0	0.1—6.0	26.4—19.7	26.4—19.7	2	9.0	19.8
50	2	BTR400S		0.4	0.12—8.0	0.12—8.0	31.7—26.2	31.7—26.2			
		BTR750S		0.75	0.17—10.0	0.16—10.0	44.9—32.8	42.3—32.8		12.4	27.3

Standard Accessories

- Cable (5m)·····1 pc.
- Hose nipple ·····1 pc.
- Cable strain relief ·····1 pc.

Features

1. The unit is reduced the weight by adopting the compact capacitor motor and reducing the main parts size
2. Maintenance
   By removing only three bolts, the pump can be disassembled.
   Maintenance of pump housing and impeller is simple.

Sectional View

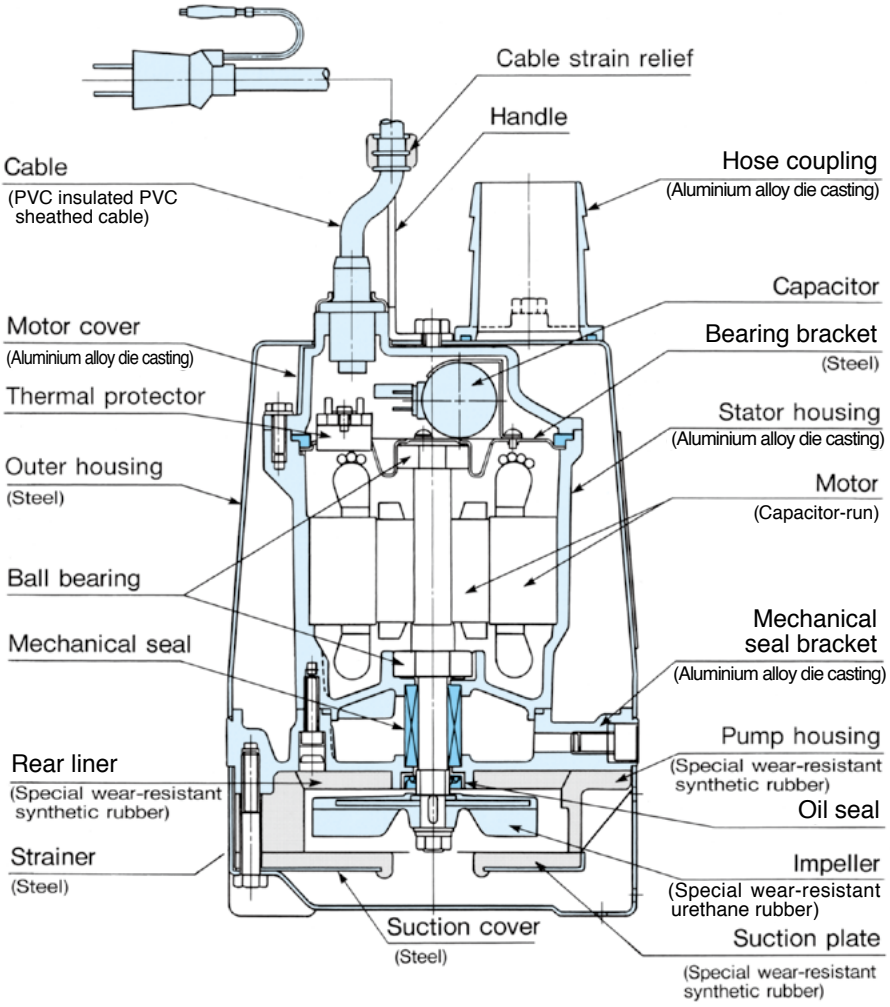

Specifications and dimensions are subject to change without notice.

ShinMaywa Industries, Ltd.

Global Sales Dept.
Sales & Marketing Dept., Fluid Div.
3-2-43, Shitte, Tsurumi-ku, Yokohama, 230-0003, Japan
Phone : +81-45-584-1322 Fax : +81-45-575-2286
E-mail : global.pump@shinmaywa.co.jp

ShinMaywa (Asia) Pte. Ltd.
8 Burn Road, #14-10 Trivex, Singapore 369977
Phone : +65-6224-0728
Fax : +65-6224-9678
E-mail : asia.ad@shinmaywa.com.sg

Thai ShinMaywa Co., Ltd.
199 Moo 12, Soi Petchakasem 120, Petchakasem Road, Om-noi, Krathumban, Samutsakorn 74130 Thailand
Phone : +66-2-420-4712
Fax : +66-2-420-9863
E-mail : tsmc.fluid.sales@shinmaywa.co.jp

ShinMaywa (Shanghai) Trading Co., Ltd.
201107 Building 6, Youlejia City, Industrial Park, 333 Lane, Zhujian Road Minhang, Shanghai, China
Phone : +86-21-5296-2966
Fax : +86-21-5296-2970
E-mail : shanghai@shinmaywa.co.jp

ShinMaywa (America), Ltd.

Head Quarters
10737 Gateway West, Suite 240,
El Paso, Texas 79935, U.S.A.
Phone : +1-915-594-9862
Fax : +1-915-594-9866
E-mail : info@shinmaywaamerica.com

North Carolina Branch
6135 Park South Drive, Suite 510
Charlotte, NC, 28210, U.S.A.
Phone : +1-704-945-7112
Fax : +1-704-945-7101
E-mail : pump@shinmaywaamerica.com

URL : https://www.shinmaywa.co.jp/america/index.html

ShinMaywa ONO PLANT
ISO 9001-0066539/ISO 14001-0066652

'23. 2 Z-E051D Printed in Japan1.10 Ⓗ