Output: 1.5 - 15 kW (2 - 20 HP)

SU

SU Series is of upward discharge type suitable for aeration in a deep tank. Like the SJ Series, a high-efficiency multipole motor, instead of a reduction gear, is adopted, making it economical as it eliminates the necessity for maintenance of the reduction gear and replacement of reduction gear oil. Furthermore, no power loss due to the absence of a reduction gear allows high-efficiency operation.

Installation	Output kW (HP)	Pump Model	Page
Guide Rail Type	1.5 (2)	SU15-P	400
	2.2 (3)	SU22-P	
	3.7 (5)	SU37-P	
	5.5 (7.5)	SU55-P	
	7.5 (10)	SU75-P	
	11 (15)	SU110-P	
	15 (20)	SU150-P	
Free Standing Type	1.5 (2)	SU15-F	
	2.2 (3)	SU22-F	
	3.7 (5)	SU37-F	
	5.5 (7.5)	SU55-F	
	7.5 (10)	SU75-F	
	11 (15)	SU110-F	
	15 (20)	SU150-F	

SU

Submersible Aerator
(Upward Discharge and Multipole Motor Direct-Drive Type)

Features

● Available for both Aerobic and Anaerobic mixing

The SU-series is a forced-air supply type submersible aerator. It can be used for both aerobic and anaerobic mixing simply by running or halting the operation of the air blower. It is suitable for denitrification, nitrification and SBR processes.

● Suitable for Operation in a Deep tank

The SU-series can be operated efficiently even in a deep tank by insalling with a draft tube (optional accessory).

● Compact and Lightweight

Multipole motor (50 Hz: 10 P, 60 Hz: 12 P) direct drive design is compact and lightweight. No gear oil replqcement is needed because no reduction gear is used.

● Low Energy Consumption

The special designed axial-flow impeller for SU-series and upward discharge casing ensure high oxygen transfer rate with a low energy consumption.

● High durability

The time-proven double mechanical seals with 4-faces SiC ensure high durability in the application of continuous operation in a long-term.

● Reinforced Cabtyre cable

Lightweight and tough cabtyre cable with special reinforcement and core sealer is employed.

● Easy Maintenance

Motor and impeller can be removed from the casing by simply unfastening the six bolts, which provides simple maintenance accessibility.

Applications

○ Sewage and Industrial waste treatment facilities
- Aeration and mixing processes
- Anaerobic or anoxic mixing process
- SBR process

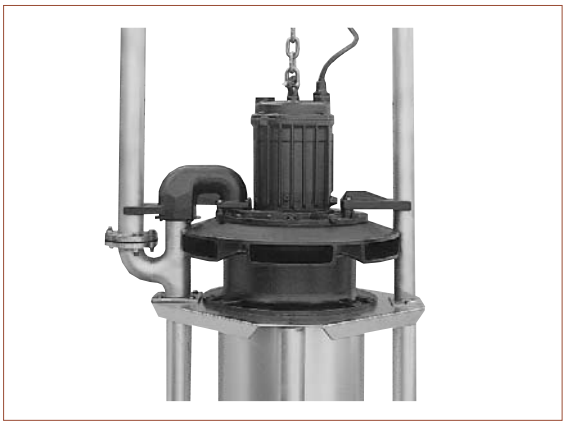

Standard Specifications

Handling Liquid	Kind of Liquid	Sewage water (including sewer water, human waste, industrial effluents, polluted sludge)
	Temperature	0 - 40˚C
Material	Cable	2PNCTS
	Motor Shaft	Stainless steel (SUS329J1)
	Impeller	Stainless steel casting (SCS13)
	Discharge Casing	Gray iron casting (FC250)
Electric Motor	Name	Air-filled type Submersible Induction Motor
	Insulation Class	Class E
	Enclosure	IP68
	Phase	3-ph
	Voltage	200 - 480V
	Pole	10P/12P (50/60Hz)
	Starting Method	Direct
	Motor Protector	Micro Thermal Protector (MTP)

Special Specifications

Motor Insulation	Class F
Cable Extension	Cable Length: 15 - 30m (every 5m) * If a Cable Length exceeds 30 m, please contact us.
Motor Protector	Leakage Detector
High Temperature Specifications	Water temperature of 60°C (Only cables are changed)

For special specifications other than the above, please contact us.

■Function Explanation Diagram (SU-P: Guide rail type with a draft tube)

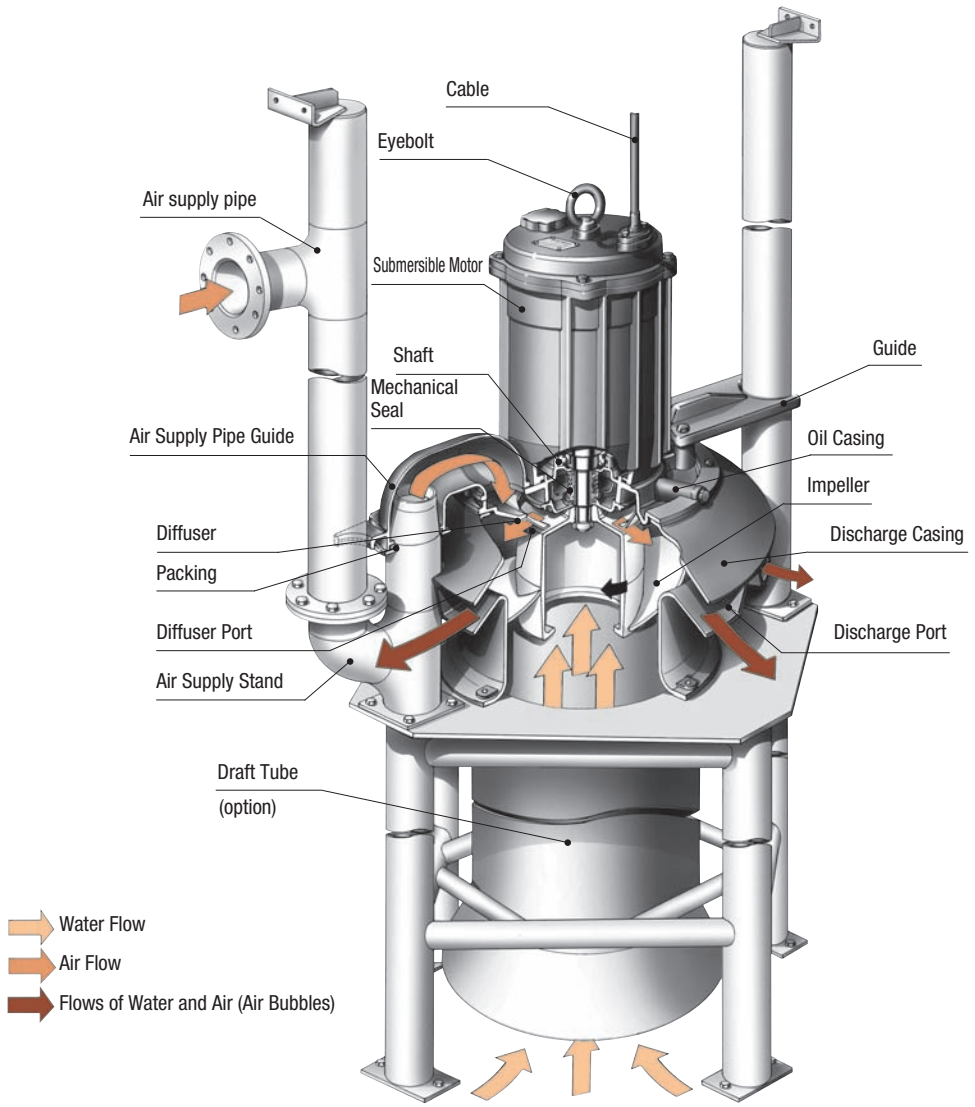

■Flow Patterns

● Aeration Water flow

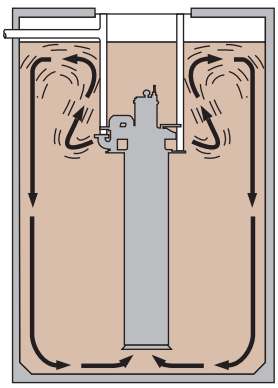

● Mixing Water flow

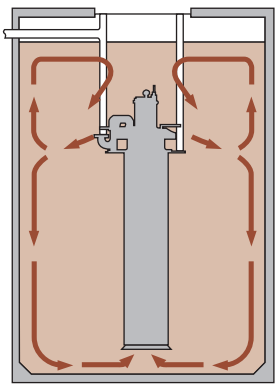

SU

Submersible Aerator (Upper Discharge and Multipole Motor Direct-Drive Type)

■Standard Specifications

Model	Output kW (HP)	Discharge Water Volume m³/min	Airflow Range*1 m³/min	Reference Performance*2 (Water Depth 5m) Airflow m³/min	Reference Performance*2 (Water Depth 5m) Oxygen Transfer Rate kg (O_2)/h	Necessary Blowing Pressure at Air Supply Connection Port* 3 kPa {mmAq}	Applicable Tank Size Max. Volume m³	Applicable Tank Size Max. Surface Area m²	Applicable Tank Size Max. Side Length of Rectangle m	Weight (Bare Body) kg
SU15	1.5 (2)	9	0.6 - 3.2	1.6	6.0	Installation Water Depth + 3.0 {+ 300}	250	46	7.5	175
SU22	2.2 (3)	11	0.9 - 4.6	2.4	9.2	Installation Water Depth + 4.0 {+ 400}	350	65	8.8	195
SU37	3.7 (5)	17	1.1 - 7.5	4.3	15.7	Installation Water Depth + 5.0 {+ 500}	600	110	11.5	230
SU55	5.5 (7.5)	28	1.6 - 10.7	6.4	23.6	Installation Water Depth + 5.0 {+ 500}	900	165	13.9	320
SU75	7.5 (10)	39	3.2 - 14.5	8.6	31.6	Installation Water Depth + 6.0 {+ 600}	1,250	230	16.5	360
SU110	11 (15)	55	5.4 - 21.5	11.8	45.0	Installation Water Depth + 5.0 {+ 500}	1,800	330	20.0	700
SU150	15 (20)	75	6.4 - 25.8	16.1	62.5	Installation Water Depth + 7.5 {+ 750}	2,400	440	23.0	1,000

For motors characteristics, bearings and oils, see the specifications (detail data) - App.1. The value within the parenthesis { } are given for reference.
Note 1) *1 - *3 are applicable to the Guide rail and Free standing types only and not to the Mixing type.
Note 2) Air Break may occur, depending on debris in the tank or liquid quality, in which case the airflow range may be extremely small.
Note 3) These values are subject to at a clear water temperature of 20°C and a concentration of dissolved oxygen of 0mg/ℓ. They vary approximately 10%, depending on measurement conditions. They need to be corrected with the water quality, temperature of inflowing water and the concentration of dissolved oxygen in the tank. The airflow range and applicable tank size values are obtained at a sludge concentration of 5,000mg/ℓ.

■Standard Accessories

- Cable (10m).....1 pc.
- Cable Holder.....1 pc.
- Connecting Device.....1 set

Guide Rail Type: Air Supply Stand
Free Standing Type: Air Supply Pipe and Suction Stand

■Special Accessories

- Lifting Chain
- Special Tools
- Anchor Bolt
- Guide Pipe
- Draft Tube

■Part Specifications

Applicable Model	Cable Specifications Type	Section Area (mm²)	Cores	Applications	Outer Dia. (mm)	Starting Method	Mechanical Seal Lower	Mechanical Seal Upper
SU15・SU22	2PNCTS	2 2 (2)	4 2 (2)	Power Control (MTP) (Control (Leakage Detector))	φ16 (φ18)	Direct	SiC/SiC	SiC/SiC
SU37	2PNCTS	3.5 2 (2)	4 2 (2)	Power Control (MTP) (Control (Leakage Detector))	φ18 (φ20)			
SU55	2PNCTS	5.5 2 (2)	4 2 (2)	Power Control (MTP) (Control (Leakage Detector))	φ20 (φ22)			
SU75	2PNCTS	8 2 2	4 2 2	Power Control (MTP) (Control (Leakage Detector))	φ22 (φ24.5)			
SU110	2PNCTS	8 2 2	7 2 2	Power Control (MTP) (Standby (Leakage Detector))	φ30	Star-delta	SiC/SiC	SiC/SiC
SU150	2PNCTS	14 2 2	7 2 2	Power Control (MTP) (Standby (Leakage Detector))	φ33			

( ) The values within the parenthesis indicate those for special specifications (with a Leakage Detector).

Performance Curves (Conditions: Normal air flow, clear water at a temperature of 20°C, and dissolved oxygen at a concentration of 0mg/l)

SU15

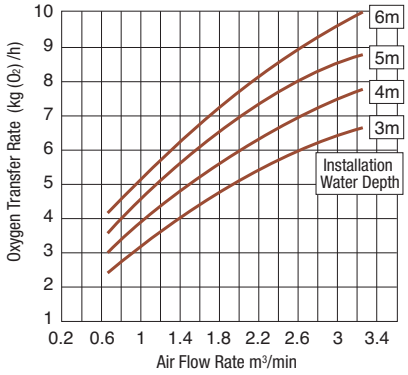

SU22

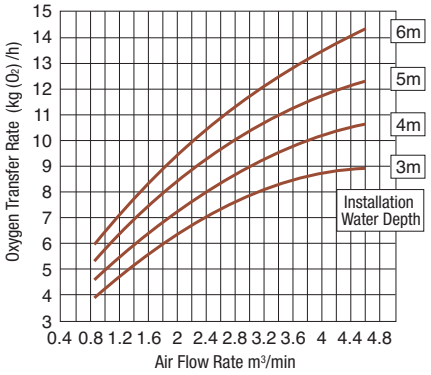

SU37

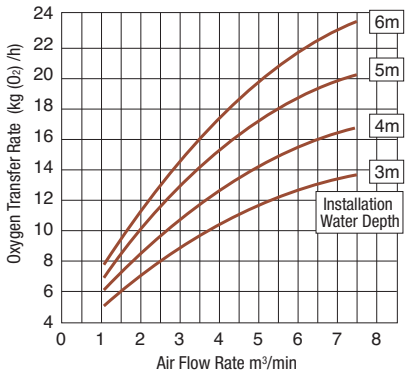

SU55

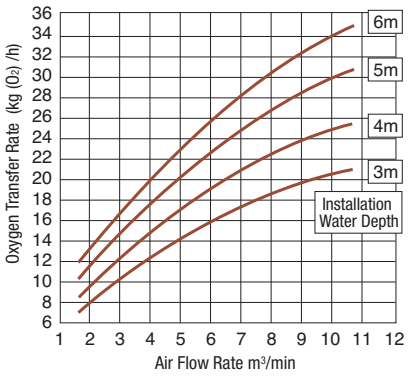

SU75

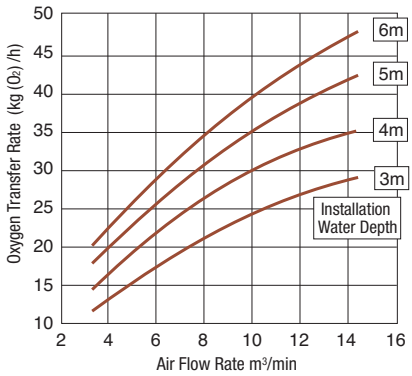

SU110

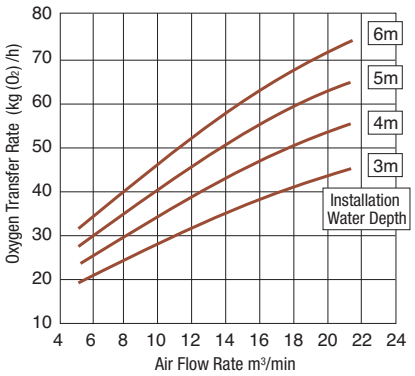

SU150

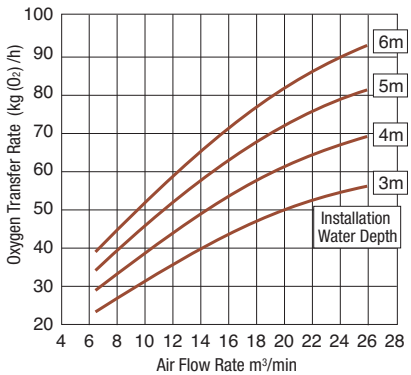

* Normal air flow conditions: Temperature of 20°C, absolute pressure of 101.3 kPa and relative humidity of 65%

Dimensions

Unit: mm

Guide rail type SU-P

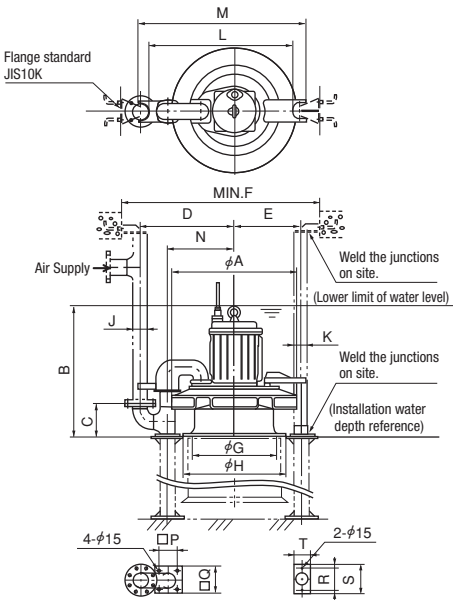

Model	Output kW (HP)	A	B	C	D	E	F	G	H	J
SU15-P	1.5 (2)	600	665	200	495	350	1,050	420	506	65A
SU22-P	2.2 (3)	670	684	200	495	350	1,050	480	560	65A
SU37-P	3.7 (5)	740	770	200	555	390	1,150	520	600	80A
SU55-P	5.5 (7.5)	890	798	250	685	480	1,400	616	716	100A
SU75-P	7.5 (10)	890	886	300	740	535	1,550	616	716	125A
SU110-P	11 (15)	1,150	1,168	350	920	610	1,900	854	960	150A
SU150-P	15 (20)	1,400	1,386	350	1,025	720	2,200	1,004	1,110	150A

Model	Output kW (HP)	K	L	M	N	P	Q	R	S	T
SU15-P	1.5 (2)	50A	768	905	355	100	125	120	170	80
SU22-P	2.2 (3)	50A	768	905	355	100	125	120	170	80
SU37-P	3.7 (5)	65A	852	990	393	120	150	130	180	100
SU55-P	5.5 (7.5)	80A	1,049	1,206	479	150	200	140	190	120
SU75-P	7.5 (10)	100A	1,129	1,300	489	200	230	170	220	140
SU110-P	11 (15)	125A	1,359	1,560	625	200	250	200	250	180
SU150-P	15 (20)	125A	1,574	1,775	730	200	250	200	250	180

Sectional View

SU-P
Guide rail type

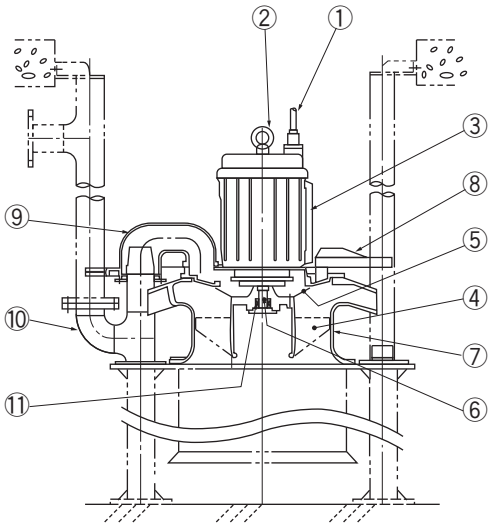

Number	Name	Material
1	Cable	2PNCTS
2	Eyebolt	SUS304
3	Submersible Motor	–
4	Impeller	SCS13
5	Diffuser	SUS304
6	Shaft	SUS329J1
7	Discharge Casing	FC250
8	Guide	FC200
9	Air Supply Pipe Guide	FC250
10	Air Supply Stand	SUS304
11	Locking Element	–

* Note **VCT** : Polyvinyl-chloride sheathed cabtyre cable **2PNCT** : Chloroprene sheathed cabtyre cable **SUS** : Stainless steel
SCS : Stainless steel casting **SS** : Mild steel **SPCC** : Steel **FC** : Gray iron casting **FCD** : Ductile iron casting **NBR** : Nitryl rubber

■Dimensions

Unit: mm

Free standing type SU-F

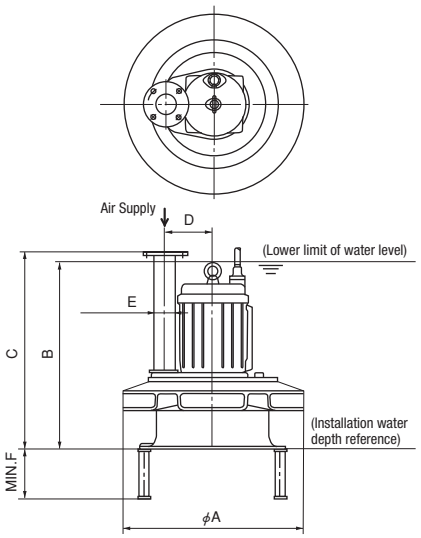

Model	Output kW (HP)	A	B	C	D	E	F
SU15-F	1.5 (2)	600	665	665	189	65A	200
SU22-F	2.2 (3)	670	684	665	189	65A	200
SU37-F	3.7 (5)	740	770	684	198	80A	200
SU55-F	5.5 (7.5)	890	798	845	232	100A	200
SU75-F	7.5 (10)	890	886	945	232	125A	250
SU110-F	11 (15)	1,150	1,168	1,136	277	150A	400
SU150-F	15 (20)	1,400	1,386	1,354	277	150A	400

* We will handle orders for the above dimensions. For detailed dimensions, please contact us.

■Sectional View

SU-F Free standing type

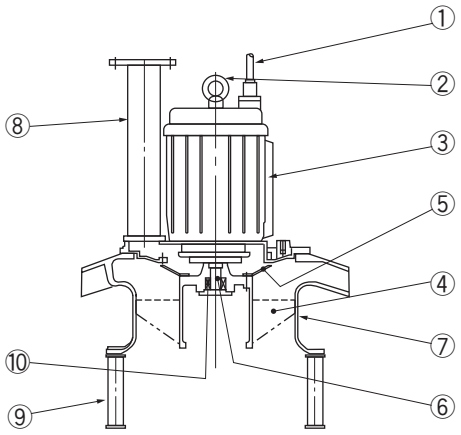

Number	Name	Material
1	Cable	2PNCTS
2	Eyebolt	SUS304
3	Submersible Motor	–
4	Impeller	SCS13
5	Diffuser	SUS304
6	Shaft	SUS329J1
7	Discharge Casing	FC250
8	Air Supply Pipe	SUS304
9	Suction Stand	SUS304
10	Locking Element	–

* The shape of the suction stand varies depending on model.

* Note **VCT** : Polyvinyl-chloride sheathed cabtyre cable **2PNCT** : Chloroprene sheathed cabtyre cable **SUS** : Stainless steel
SCS : Stainless steel casting **SS** : Mild steel **SPCC** : Steel **FC** : Gray iron casting **FCD** : Ductile iron casting **NBR** : Nitryl rubber

■Recommended Installation Work

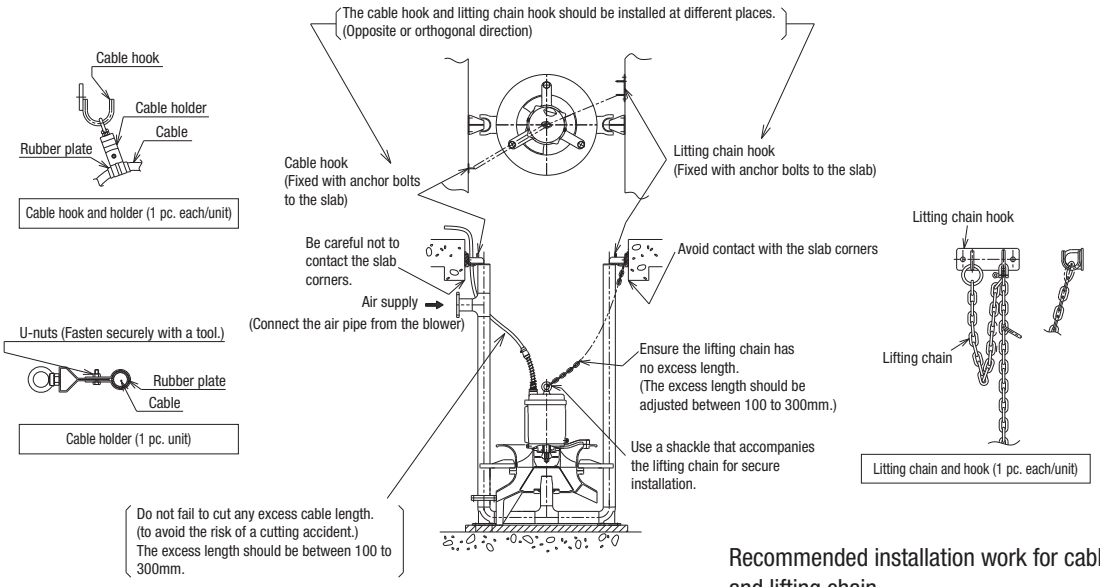

Recommended installation work for cable and lifting chain

The SJ-P type is described as an example, but the case is the same for both SJL-P and SU-P types.