Screw Impeller

Bore: 65 - 150 mm (2 1/2" - 6")
Output: 1.5 - 22 kW (2 - 30 HP)

CW·CWH

The CW series, mounting screw impeller with a high pass-through capability, can transfer water containing plastics and fibers that are prone to cause clogging. The screwing effect at the impeller entry enables the transfer of high-viscosity sludge. The CW series can effectively transfer filth and sludge during treatment of sewerage.

Bore mm (inch)	Output kW (HP)	Model	Page
65·80 (2 1/2"·3")	1.5 (2)	**CW65**	204
65·80·100 (2 1/2"·3"·4")	1.5 - 3.7 (2 - 5)	**CW80**	
80·100 (3"·4")	5.5·7.5 (7.5 - 10)	**CW100**	
100 (4")	11 - 22 (15 - 30)	**CWH100**	
150 (6")	5.5 - 22 (7.5 - 30)	**CW150**	

CW

Screw Impeller

Bore : **65 - 150 mm (2 1/2 - 6")**

Output: **1.5 - 22 kW (2 - 30 HP)**

Features

● **Excellent pass-through capability**

The screw type impeller, can transfer water containing plastics and fibers that are prone to cause clogging. The screwing effect at the impeller entry enables transfer of high-viscosity sludge.

● **Easily removable impeller**

The impeller, supplied as an integral part, can be easily mounted and removed, similar to those used in conventional pumps for transferring sewage water or filth.

● **Limit load characteristics**

The screw impeller has limit-load characteristics. No overload occurs, even at a high flow rate.

● **Extended service life**

A double mechanical seal with excellent wear resistance is employed for the shaft seal mechanism.

● **Preventing motor burnout**

An auto-reset type motor protector (Thermal Protector) prevents motor burnout due to overload. A core wire seal, applied to a cable, prevents water leakage into the motor chamber in case a cable sheath breaks or a cable end is immersed.



CW100-P100B

Standard Specifications

Handling Liquid	Liquid Type	Wastewater, sewage containing sludge
	Temperature	0 - 32°C
Material	Cable	VCT: 7.5 kW or less, 2PNCT: 11 kW or more
	Motor Shaft	SUS420J2
	Pump Casing	FC250
	Impeller	FC250 or FCD500 (22 kW)
Electric Motor	Name	Air-filled type Submersible Induction Motor
	Insulation Class	Class E
	Enclosure	IP68
	Phase	3-ph
	Voltage	200 - 480V

Pump-Related Product

○ Liquid Level Control Switch

Level Regulator ⇨ See page 370

Mini Switch ⇨ See page 372

Oval Float ⇨ See page 373

Applications

○ Sewage treatment plant
Raw water, sludge

○ Pumping station
Raw water, Rainwater

○ Factory
Industrial wastewater

○ Building, Shopping complex
Domestic wastewater

○ Others
Various wastewater including sludge

Special Specifications

Motor Insulation	Class F
Cable Extension	Cable lengths: 10 - 30m (every 5m)
Material Changes	Impeller: SCS13 (Stainless steel casting) Base Cover: SCS13 (Stainless steel casting) Lifting Chain: SUS304 (Stainless steel)
Suction Pipe	Suction pipes dedicated to low water levels are also available.
Others	• Availability of mounting motor protector, please refer to the specifications (detail data) - App.1. • For specifications other than the above, please contact us.

Performance Curves

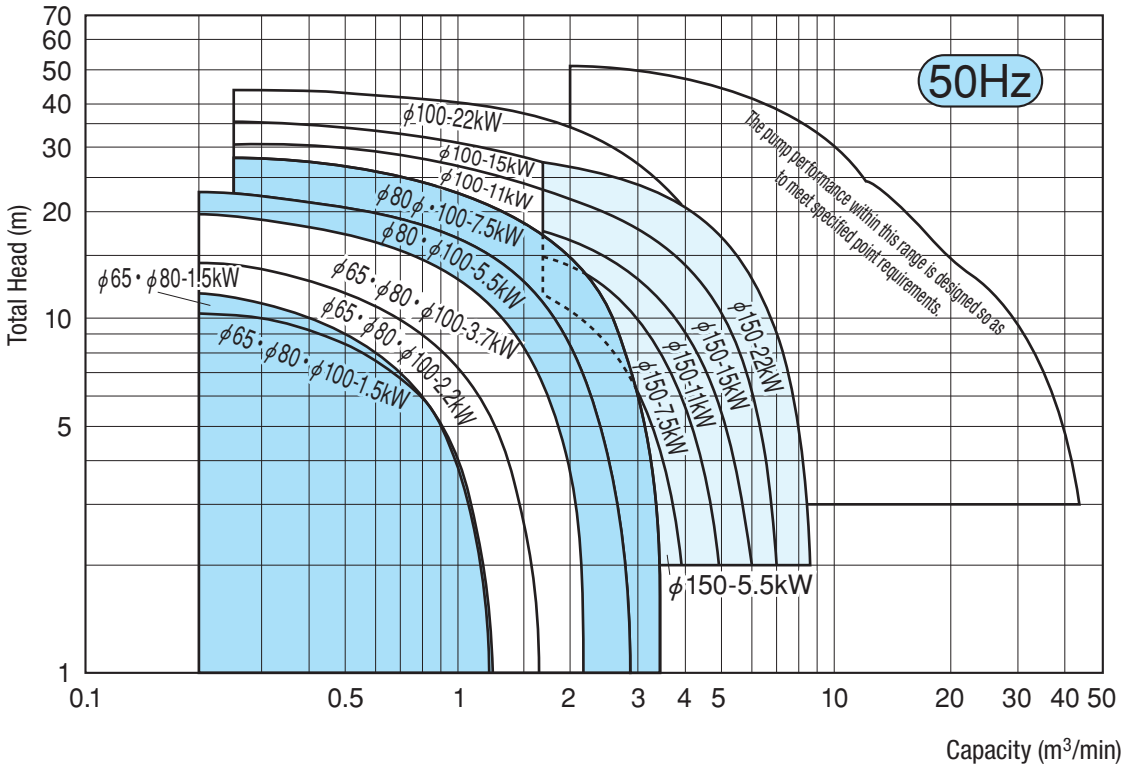

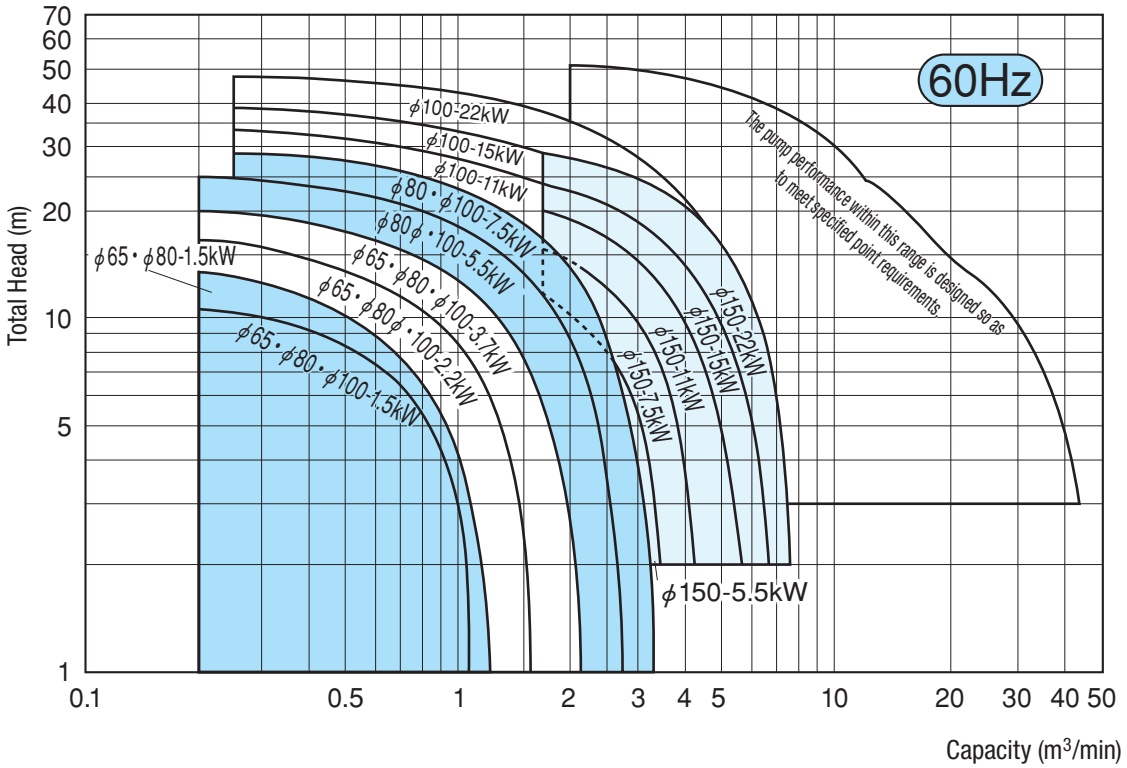

CW

Screw Impeller

Bore : **65 - 150 mm (2 1/2 - 6")**

Output: **1.5 - 22 kW (2 - 30 HP)**

Standard Specifications

Bore mm (inch)	Pump Model	Connection Part No.		Output kW (HP)	Phase	Capacity - Total Head m³/min-m		No. of poles P	Weight (Bare Pump) kg
		Auto-Connection	Free Standing			50Hz	60Hz		
65 (2 1/2")	CW65	P65	F65	1.5 (2)	3-ph	0.6– 8.0	0.6 – 8.9	4	55
	CW80					0.7– 6.8	0.62– 7.2		65
				2.2 (3)		0.8– 8.9	0.8 –10.5		70
				3.7 (5)		1.1–11.7	1.1 –11.7		84
80 (3")	CW65	P80	F80	1.5 (2)	3-ph	0.6– 8.0	0.6 – 8.9	4	55
	CW80	P80B				0.7– 6.8	0.62– 7.2		65
				2.2 (3)		0.8– 8.9	0.8 –10.5		70
				3.7 (5)		1.1–11.7	1.1 –11.7		84
	CW100			5.5 (7.5)		1.4–13.3	1.3 –15.2		115
				7.5 (10)		1.7–16.9	1.7 –16.8		130
100 (4")	CW80	P100B	F100	1.5 (2)	3-ph	0.7– 6.8	0.62– 7.2	4	65
				2.2 (3)		0.8– 8.9	0.8 –10.5		70
				3.7 (5)		1.1–11.7	1.1 –11.7		84
	CW100			5.5 (7.5)		1.4–13.3	1.3 –15.2		115
				7.5 (10)		1.7–16.9	1.7 –16.8		130
	CWH100	P100C	F100B	11 (15)	3-ph	2.5–17.5	2.3 –19.4	4	246
				15 (20)		2.7–20.5	2.5 –23.0		260
				22 (30)		3.0–27.0	3.3 –27.5		310
150 (6")	CW150	P150	F150	5.5 (7.5)	3-ph	2.1–10.0	2.0 –10.6	4	162
				7.5 (10)		2.6–11.3	2.6 –11.7		170
				11 (15)		3.2–12.1	3.2 –13.4		245
				15 (20)		3.6–15.6	3.6 –16.0		258
				22 (30)		4.5–18.3	4.5 –18.2		306

For motor characteristics, bearings and oils, see the specifications (detail data) - App.1.

Standard Accessories

- Cable (8 m) 7.5 kW or less ..... 1 pcs.
  11 kW or more ..... 3 pcs.
- Air Vent Valve
  (except for 1.5 kW)

Upon placing an order or inquiries, please inform us of the pump model and connection part No.

●Auto-connection type

- Connection
  (For the CWH100 and CW150, bolts and nuts are included.)
- Guide Holder (with bolts and nuts)
- Sliding Bracket
- Lifting Chain (6 m)

Connection Part No.	Set Weight	Connection Weight
P65	24kg	15kg
P80	31.5kg	20.5kg
P80B	31.5kg	18kg
P100B	40.5kg	27kg
P100C	55kg	37kg
P150	60kg	42kg

●Free standing type

- Elbow Flange
- Companion Flange
  (with bolts, nuts and packing)

Connection Part No.	Set Weight
F65	7kg
F80	9.5kg
F100	11kg
F100B	12kg
F150	30kg

Part Specifications

Applicable Model		Cable Specifications				Starting Method	Mechanical Seal		Solid Passage Dia. (Soft Solid) (mm)	
		Type	Section Area (mm^2)	Cores	Outer Dia. (mm)		Lower	Upper	50Hz	60Hz
CW65	1.5kW (2 HP)	VCT	1.25	4	φ11.5	Direct	SiC/SiC	SiC/SiC	43	34
CW80	1.5kW (2 HP)	VCT	1.25	4	φ11.5				43	43
CW80	2.2kW (3 HP)	VCT	1.25	4	φ11.5				49	42
CW80	3.7kW (5 HP)	VCT	2.0	4	φ12				53	48
CW100	5.5kW (7.5 HP)	VCT	3.5	4	φ14				54	48
CW100	7.5kW (10 HP)	VCT	5.5	4	φ16.5				56	49
CW150	5.5kW (7.5 HP)	VCT	3.5	4	φ14				66	58
CW150	7.5kW (10 HP)	VCT	5.5	4	φ16.5				81	57
CWH100	11kW (15 HP)	2PNCT	5.5	4	φ17	Star-delta			54	51
CW150	11kW (15 HP)		5.5	3	φ15.5				78	76
			1.25	2	φ 9.8					
CWH100	15kW (20 HP)	2PNCT	8.0	4	φ18.5				57	62
CW150	15kW (20 HP)		8.0	3	φ17				80	76
			1.25	2	φ 9.8					
CWH100	22kW (30 HP)	2PNCT	14	4	φ22				73	65
CW150	22kW (30 HP)		14	3	φ20				80	78
			1.25	2	φ 9.8					

CW

Screw Impeller

Bore : **65 - 150 mm (2 1/2 - 6")**

Output: **1.5 - 22 kW (2 - 30 HP)**

Performance Curves

CW65 • 80 • 100

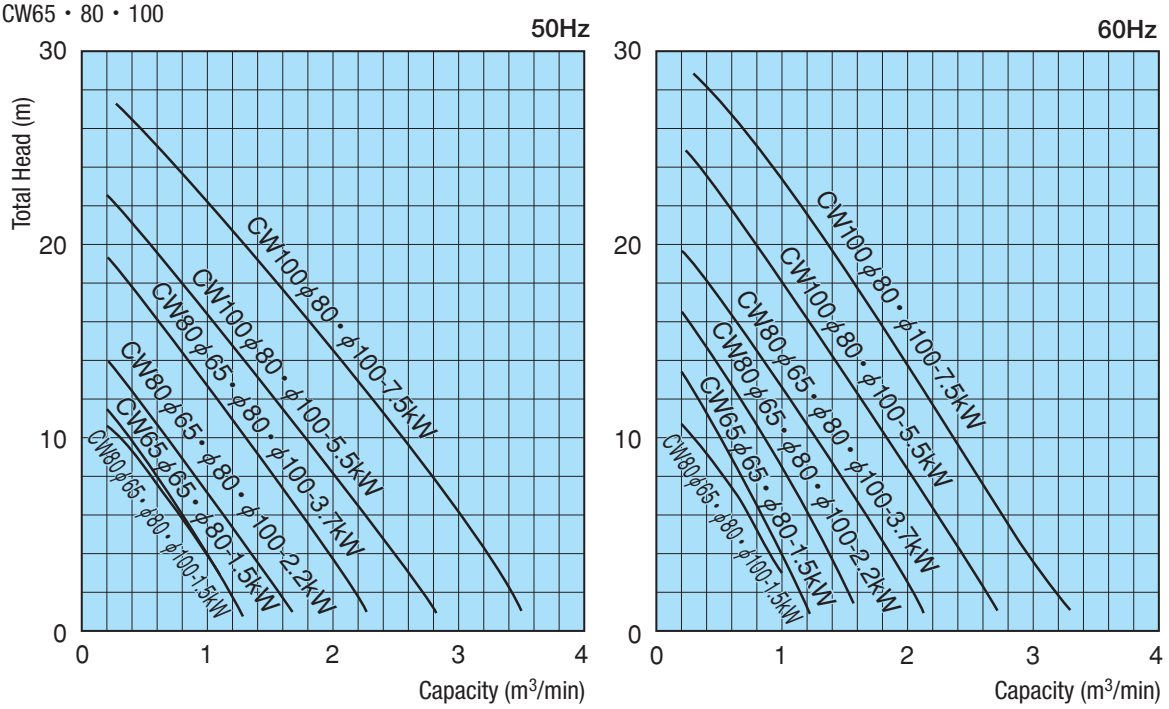

CWH100 • CW150

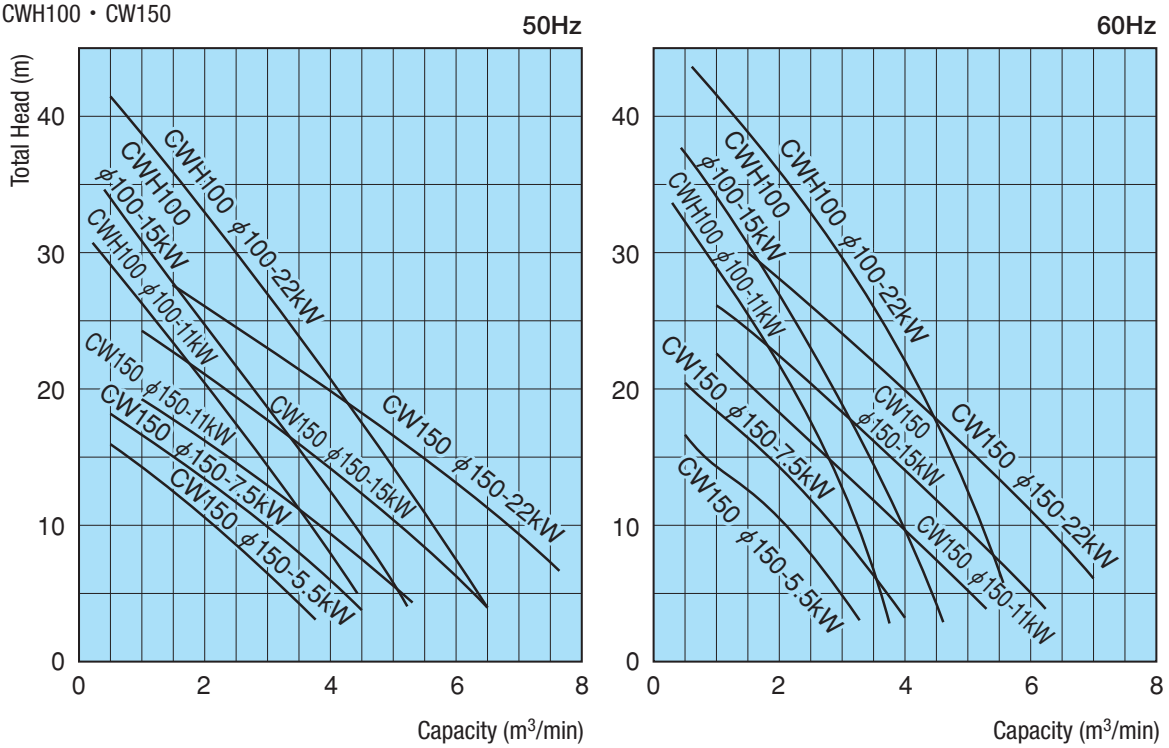

Dimensions

Unit: mm

Free standing type

CW65
CW80 (1.5kW)

CW80
CW100

CWH100
CW150

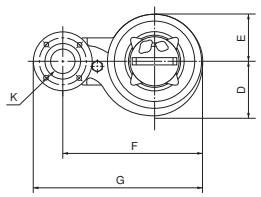

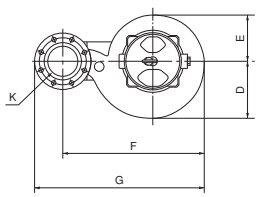

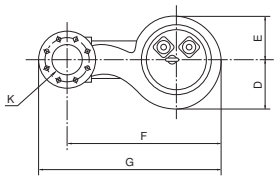

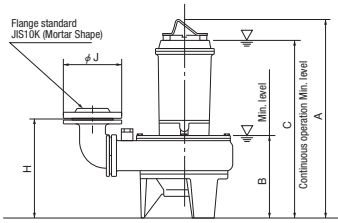

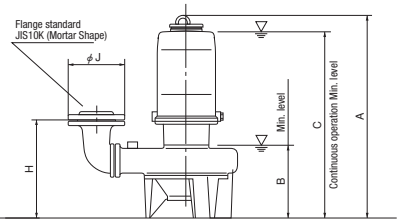

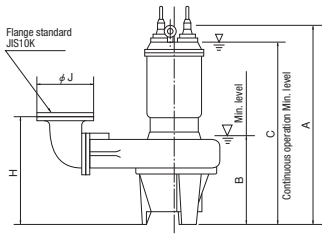

Pump Model	Output kW (HP)	Connection Part No.	A	B	C	D	E	F	G	H	J	K
CW65	1.5 (2)	F65	570	220	505	152	123	392	480	276	175	Rc2½
		F80						402	495	306	185	Rc3
CW80	1.5 (2)	F65	595	245	530	161	142	421	509	297	175	Rc2½
		F80							524	327	185	
		F100							541	337	210	
	2.2 (3)	F65	606	245	550	161	131	421	509	297	175	Rc2½
		F80						431	524	327	185	Rc3
		F100						436	541	337	210	Rc4
	3.7 (5)	F65	687	265	630	183	148	440	528	316	175	Rc2½
		F80						450	543	346	185	Rc3
		F100						455	560	356	210	Rc4
CW100	5.5 (7.5)	F80	725	275	665	197	158	508	601	356	185	Rc3
		F100						513	618	366	210	Rc4
	7.5 (10)	F80	760		700	215	172	523	616	356	185	Rc3
		F100						528	633	366	210	Rc4
CWH100	11・15 (15・20)	F100B	866	340	785	259	227	743	848	405	210	Rc4
	22 (30)		960	340	880	282	247	765	870	405	210	Rc4
CW150	5.5 (7.5)	F150	824	370	765	222	178	696	836	478	280	Rc6
	7.5 (10)		859	370	800	222	178	696	836	478	280	Rc6
	11・15 (15・20)		966	440	885	240	210	750	890	528	280	Rc6
	22 (30)		1,062	440	980	261	228	790	930	528	280	Rc6

CW

Screw Impeller

Bore : **65 - 150 mm (2 1/2 - 6")**

Output: **1.5 - 22 kW (2 - 30 HP)**

Dimensions

Auto-connection type

CW65

CW80 (1.5kW)

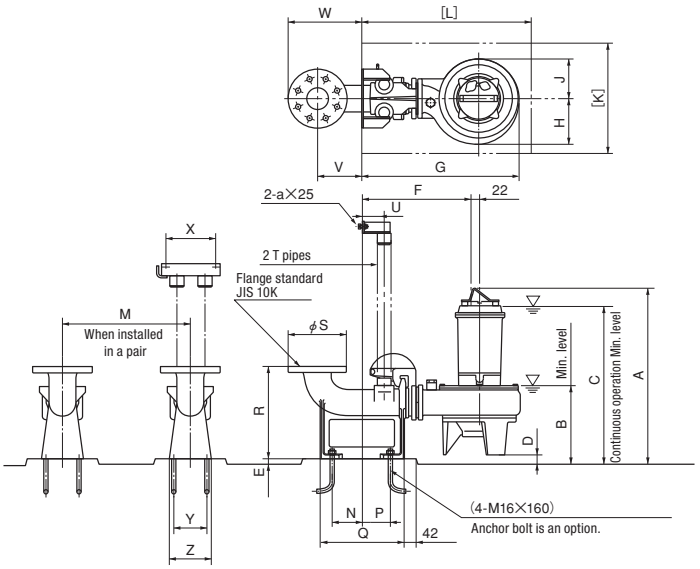

CW80

CW100

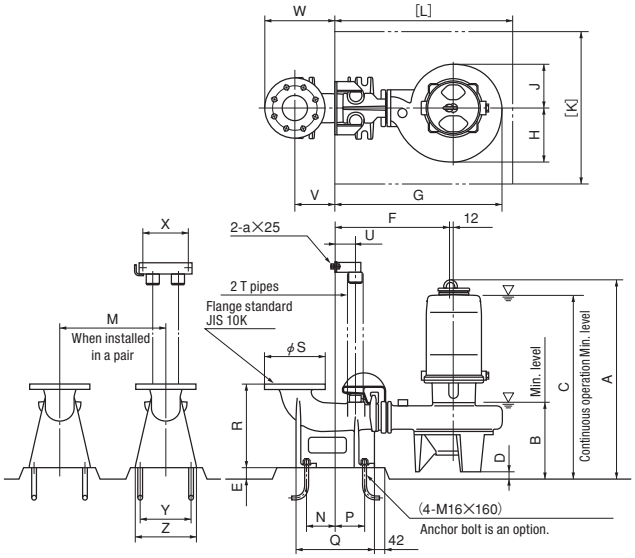

Pump Model	Output kW (HP)	Connection Part No.	A	B	C	D	E	F	G	H	J	K	L	M
CW65	1.5 (2)	P65	600	250	535	30	35	333	492	152	123	350	550	360
		P80	605	255	540	35	–	376	535			500	600	
CW80	1.5 (2)	P65	629	280	565	34	60	353	521	161	142	500	600	380
		P80B・P100B					20	396	564					
	2.2 (3)	P65	640	280	585	34	60	363	521	161	131	500	600	380
		P80B・P100B					20	406	564					
	3.7 (5)	P65	717	295	660	30	75	363	540	183	148	500	600	435
		P80B・P100B					35	406	583			600	700	
CW100	5.5 (7.5)	P80B・P100B	755	305	695	30	45	451	641	197	158	600	700	465
	7.5 (10)	P80B・P100B	790		730				656	215	172			505

Pump Model	Output kW (HP)	Connection Part No.	N	P	Q	R	S	T	U	V	W	X	Y	Z	a
CW65	1.5 (2)	P65	95	65	244	218	175	32A	50	145	233	120	140	175	M8
CW80	〃	P80・P80B	107	103	302	330	211	50A	80	160	266	180	120	150	M10
CW100	7.5 (10)	P100B	114	115	308		238				279		200	238	

Unit: mm

Auto-connection type

CWH100・CW150

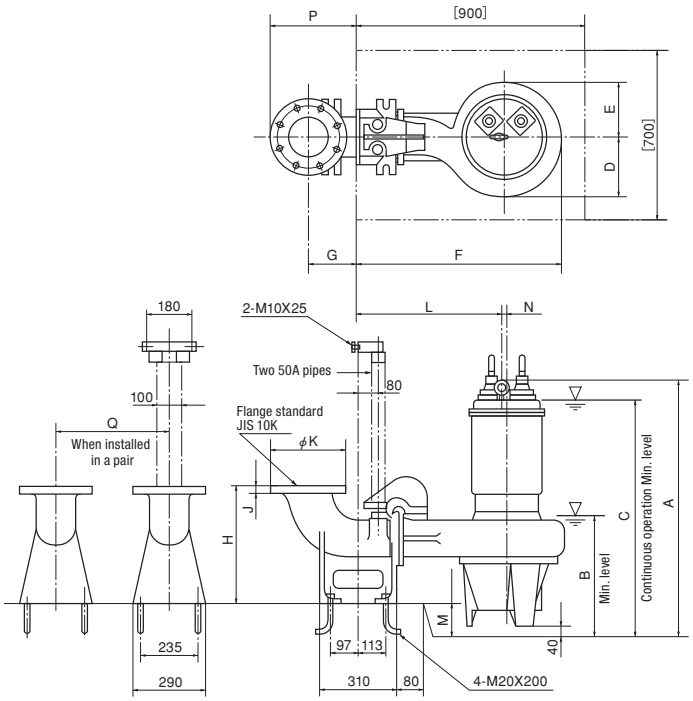

Pump Model	Connection Part No.	Output kW (HP)	A	B	C	D	E	F	G	H	J	K	L	M	N	P	Q
CWH100	P100C	11・15 (15・20)	906	380	825	259	227	831	160	380	24	238	568	45	20	279	635
		22 (30)	1,000	380	920	282	247	853	160	380	24	238	568	45	20		690
CW150	P150	5.5 (7.5)	864	410	805	222	178	759	190	450	26	290	546	85	12	335	520
		7.5 (10)	899	410	840	222	178	759	190	450	26	290	546	85	12		
		11・15 (15・20)	1,006	480	925	240	210	813	190	450	26	290	568	135	20		585
		22 (30)	1,102	480	1,020	261	228	853	190	450	26	290	588	135	20		640

●Connection Dimensions

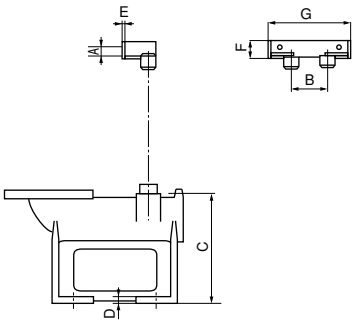

Connection Part No.	A	B	C	D	E	F	G
P65	17	70	201	12	6	32	160
P80	25	100	262	12	6	44	210
P80B	25	100	262	12	6	44	210
P100B	25	100	259	12	6	44	210
P100C	25	100	318	15	6	44	210
P150	25	100	330	15	6	44	210

CW Screw Impeller

Sectional View

CW80 Free standing type

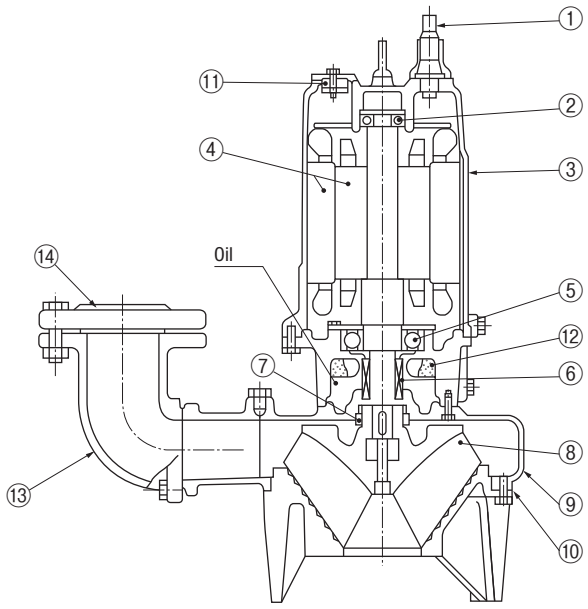

No.	Name	Material
1	Cable	VCT
2	Ball Bearing (Upper)	–
3	Stator Casing	FC200
4	Motor	Shaft: SUS420J2
5	Ball Bearing (Lower)	–
6	Mechanical Seal	–
7	Ring	SUS420J2
8	Impeller	FC250
9	Pump Casing	FC250
10	Base Cover	FC200
11	Thermal Protector	–
12	Equalizer	Foaming NBR
13	Elbow Flange	FC200
14	Companion Flange	FC200

CW80 Auto-connection type

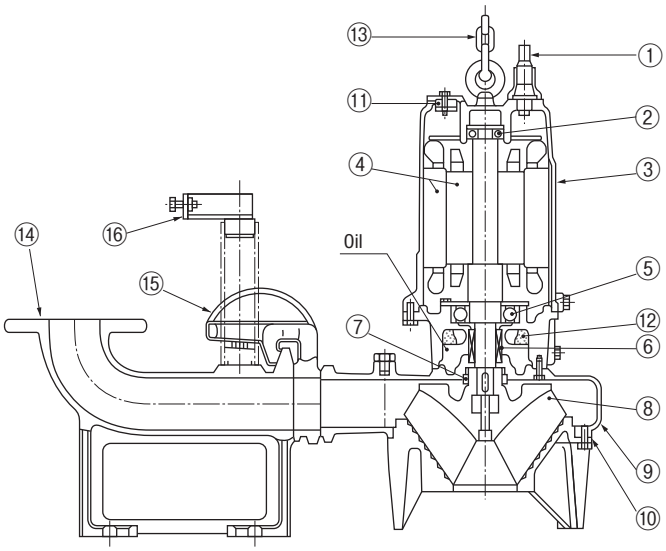

No.	Name	Material
1	Cable	VCT
2	Ball Bearing (Upper)	–
3	Stator Casing	FC200
4	Motor	Shaft: SUS420J2
5	Ball Bearing (Lower)	–
6	Mechanical Seal	–
7	Ring	SUS420J2
8	Impeller	FC250
9	Pump Casing	FC250
10	Base Cover	FC200
11	Thermal Protector	–
12	Equalizer	Foaming NBR
13	Chain	SS400
14	Connection	FC200
15	Sliding Bracket	FC200
16	Guide Holder	SCS13

* Note **VCT** : Polyvinyl-chloride sheathed cabtyre cable **2PNCT** : Chloroprene sheathed cabtyre cable **SUS** : Stainless steel
SCS : Stainless steel casting **SS** : Mild steel **SPCC** : Steel **FC** : Gray iron casting **FCD** : Ductile iron casting **NBR** : Nitryl rubber