Submersible Sand Pump (4 or 6 Poles Motor)

Bore: 80 - 200 mm (3” - 8”)
Output: 3.7 - 37 kW (5 - 50 HP)

SN

The SN series is a submersible sand pump equipped with a high-chrome cast iron impeller as standard specification. Depending on usage, you can select from various models, including the impeller with an agitator, water-jet agitation type and no agitating mechanism type.

	Bore mm (inch)	Output kW (HP)	Model	Page
Impeller with an agitator	80 (3”)	3.7 (5)	**SN35A**	336
	100 (4”)	5.5 (7.5)	**SN48E**	337
	150 (6”)	11 (15)	**SN615C**	338
	150 (6”)	22 (30)	**SN631A**	
	150 (6”)	37 (50)	**SN651A**	
	200 (8”)	37 (50)	**SN851A**	340
Water-jet agitation	150 (6”)	37 (50)	**SN651J**	338
	200 (8”)	37 (50)	**SN851J**	340
No agitating mechanism	150 (6”)	22 (30)	**SN631**	338

SN

Submersible Sand Pump
(4 or 6 Poles Motor)

Bore : **80 - 200 mm (3" - 8")**

Output: **3.7 - 37 kW (5 - 50 HP)**

Features

● **Heavy-duty materials**

Wear-resistant materials, including high-chrome cast iron for the impeller and special cast iron for the pump casing are used respectively.

● **Durable motor**

An optimal motor protector is employed for each model. Moreover, the cable has a core wire seal to prevent water leakage from the cable end.

Model	Thermal protector (Auto-reset type)	Micro-thermal Protector	Leakage Detector
SN35A	○	–	–
SN48E	○	–	–
SN615C	○	–	–
SN631 (A type)	–	○	○
SN651 (A-J type)	–	○	○
SN851 (A-J type)	–	○	○

● **High pass-through capability**

Impeller with a wide passage reduces the risk of clogging from solids.

● Please select your model from the table below according to usage.

No-agitating mechanism	With agitator	Water-jet agitation
–	SN35A	–
–	SN48E	–
–	SN615C	–
SN631	SN631A	–
–	SN651A	SN651J
–	SN851A	SN851J

Applications

○ Drainage of sand basin and sewage tank containing sand at sewage treatment facilities

○ Dewatering muddy water at dredging work, civil engineering work, and etc.

○ Removing mill scales and other sandy sendiments at iron warks or cement plants

Main Specifications

Handling Liquid	Kind of Liquid	Muddy water containing sands
	Temperature	0 - 40˚C
Material	Cable	2RNCT or 2PNCT
	Motor Shaft	SUS420J1 or J2
	Pump Casing	FC250 or FCD500
	Impeller	High-chrome cast iron
Electric Motor	Name	Air-filled type submersible induction motor
	Insulation Class	Class E, Class B or Class F
	Enclosure	IP68
	Phase	3-ph
	Voltage	200 - 480V

Performance Curves

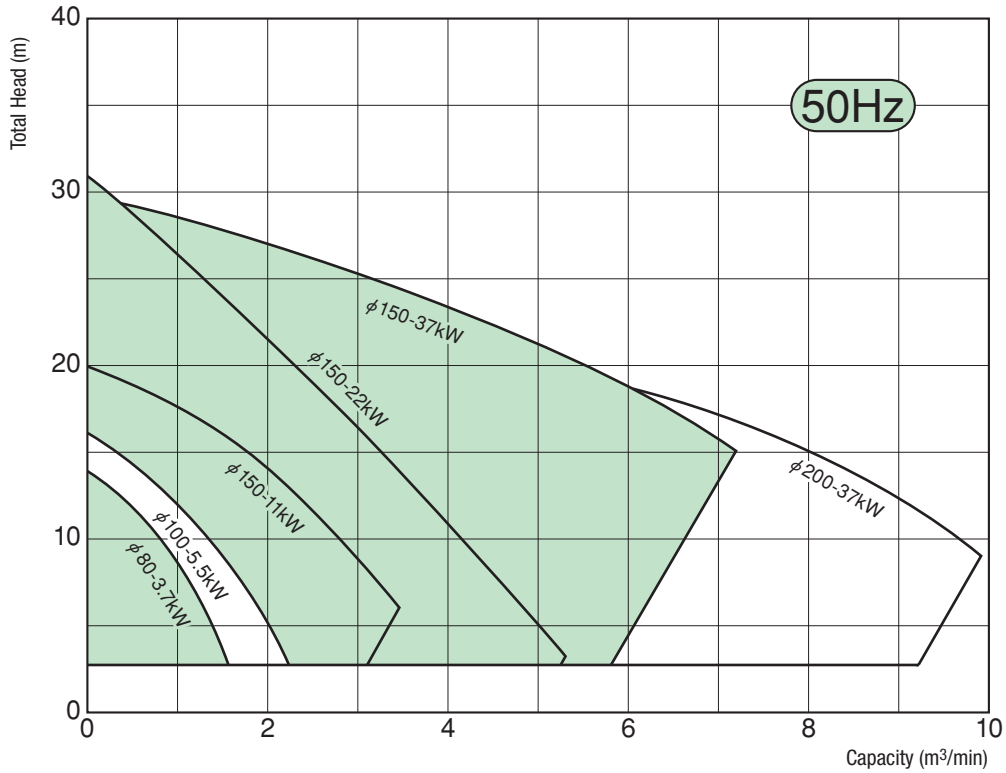

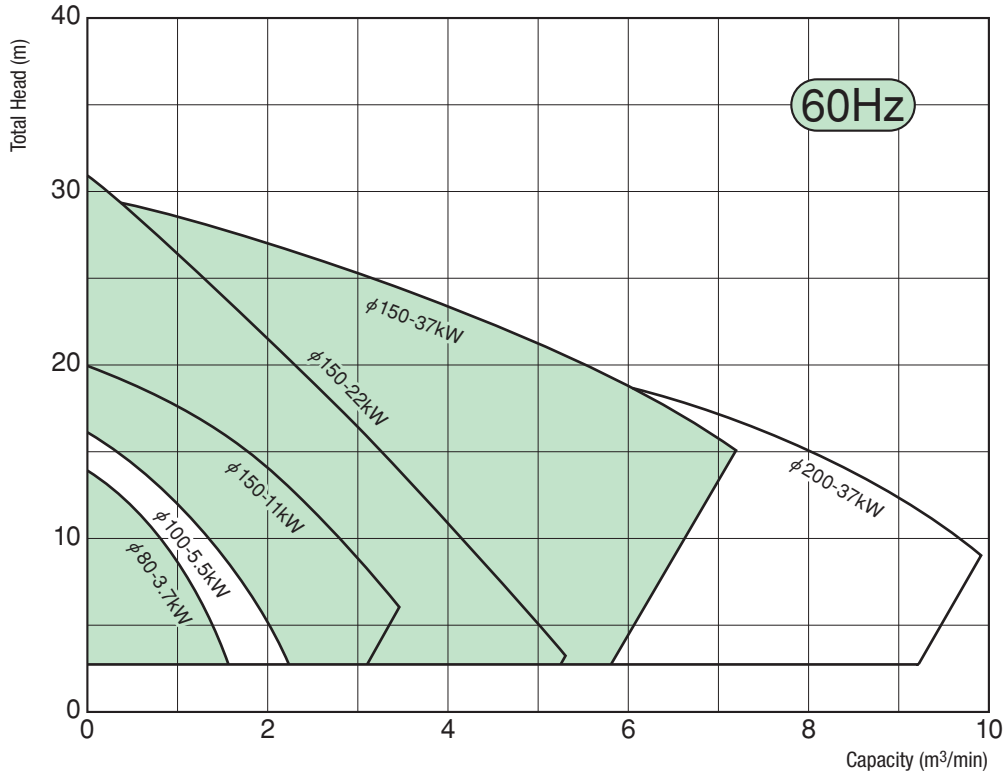





SN35A

Standard Specifications

Bore mm (inch)	Pump Model	Output kW (HP)	Phase	Capacity - Total Head m^3/min-m		No. of poles P	Weight (Bare Pump) kg
				50Hz	60Hz		
80 (3")	SN35A	3.7 (5)	3-ph	0.8–10	0.8–10	4	114

For the characteristics of the motor, bearing and oil, please refer to the specifications (detail data) - App.1.

Standard Accessories

- Cable (10m) ..... 1 pc.

Part Specifications

Applicable Model	Cable Specifications				Starting Method	Mechanical Seal	
	Type	Section Area (mm^2)	Cores	Outer Dia. (mm)		Lower	Upper
SN35A	2RNCT	3.5	4	ϕ15.8	Direct	SiC/SiC	SiC/SiC

Performance Curves

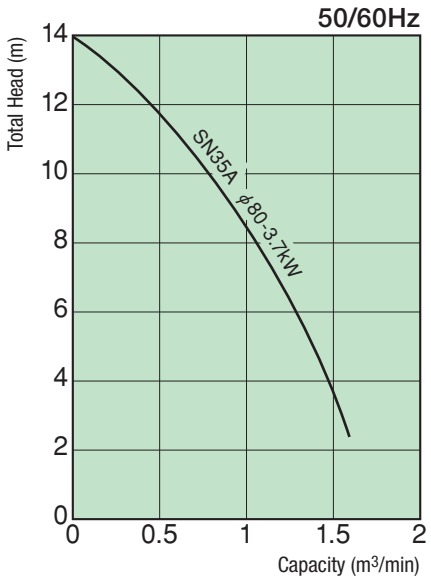

Dimensions

Unit: mm

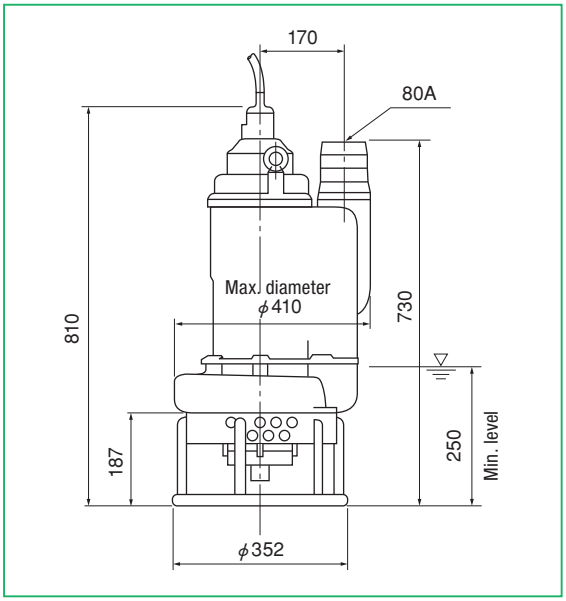





SN48E

Standard Specifications

Bore mm (inch)	Pump Model	Output kW (HP)	Phase	Capacity - Total Head m³/min-m		No. of poles P	Weight (Bare Pump) kg
				50Hz	60Hz		
100 (4")	SN48E	5.5 (7.5)	3-ph	1.3–10	1.3–10	4	115

For the characteristics of the motor, bearing and oil, please refer to the specifications (detail data) - App.1.

Standard Accessories

- Cable (10m) ..... 1 pc.

Part Specifications

Applicable Model	Cable Specifications				Starting Method	Mechanical Seal	
	Type	Section Area (mm²)	Cores	Outer Dia. (mm)		Lower	Upper
SN48E	2RNCT	3.5	4	ϕ15.8	Direct	SiC/SiC	SiC/SiC

Performance Curves

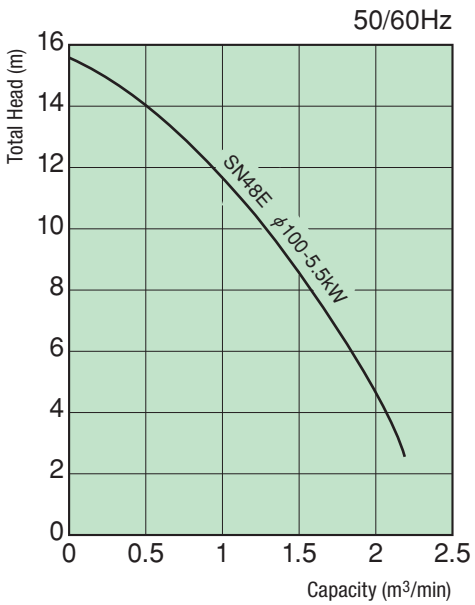

Dimensions

Unit: mm

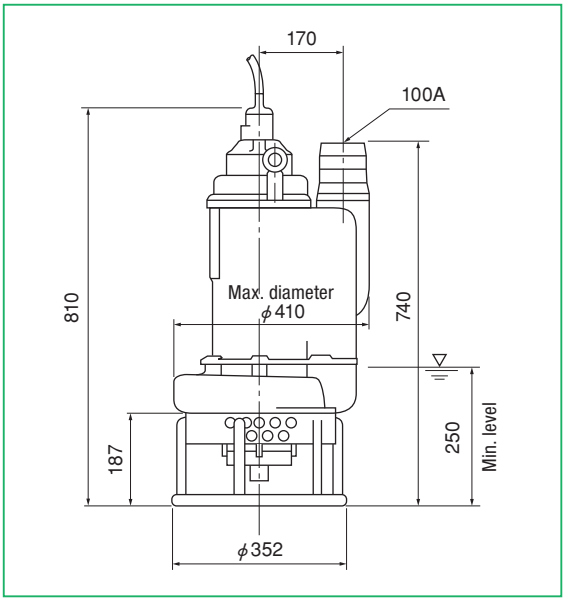

SN

Submersible Sand Pump
(4 or 6 Poles Motor)

Bore : **150 mm (6")**

Output: **11 - 37 kW (15 - 50 HP)**





SN615C



SN631A

Standard Specifications

Bore mm	Pump Model			Output kW (HP)	Phase	Capacity - Total Head m³/min-m		No. of poles P	Weight (Bare Pump) kg		
	No-agitating mechanism	With an agitator type	Water-jet agitation type			50Hz	60Hz		No-agitating mechanism	With an agitator type	Water-jet agitation type
150 (6")	–	SN615C	–	11 (15)	3-ph	2.0–14	2.0–14	4	–	240	–
	SN631	SN631A	–	22 (30)		3.2–15	3.2–15		430	435	–
	–	SN651A	SN651J	37 (50)		3.2–25	3.2–25	6	–	740	785

For the characteristics of the motor, bearing and oil, please refer to the specifications (detail data) - App.1.

Standard Accessories

- Cable (10m) ..... 1 pc.

Part Specifications

Applicable Model	Cable Specifications				Starting Method	Mechanical Seal	
	Type	Section Area (mm²)	Cores	Outer Dia. (mm)		Lower	Upper
SN615C 11kW (15 HP)	2PNCT	8	4	ϕ 21.2	Direct	Cemented carbide /Cemented carbide	Ceramic/BC
SN631 (A) 22kW (30 HP)	2PNCT	22 3 14 1 } 7 0.75 3		ϕ 31.6			Stainless/ Carbon
SN651A (J) 37kW (50 HP)	2PNCT	30 6 14 1 } 10 0.75 3		ϕ 41.3	Star-delta		SiC/SiC

Performance Curves

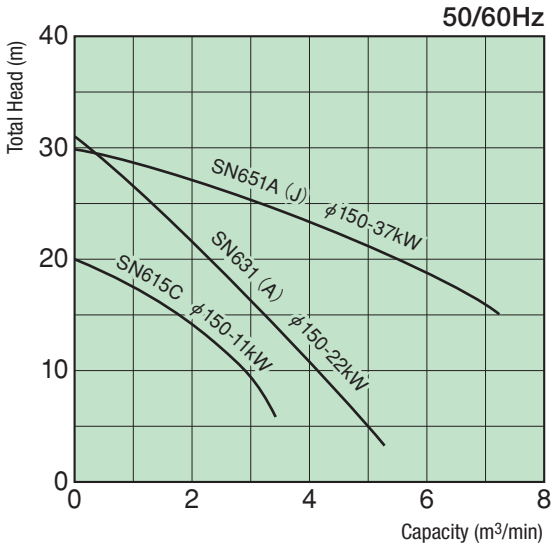

Dimensions

Unit: mm

SN615C

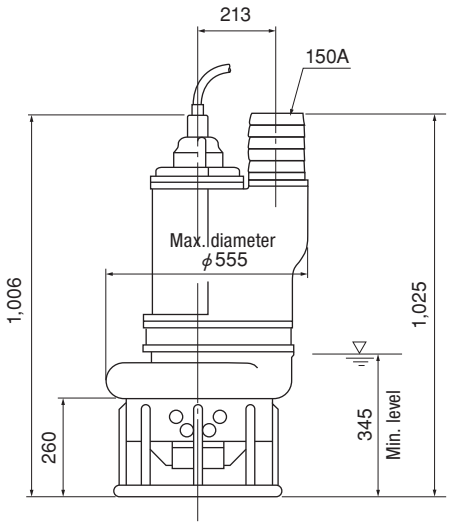

SN631A

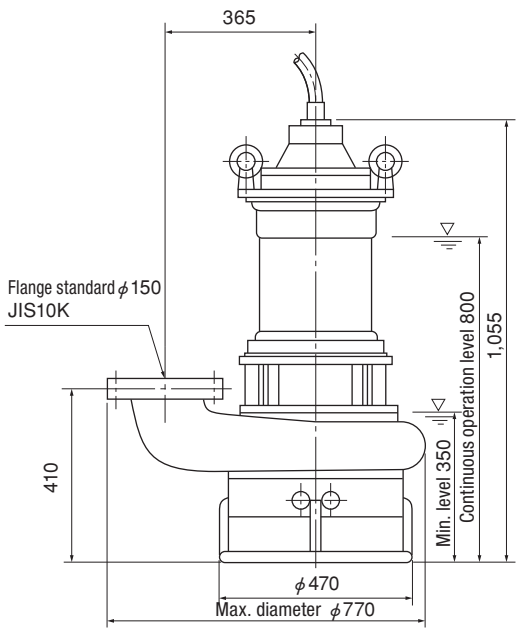

SN651A

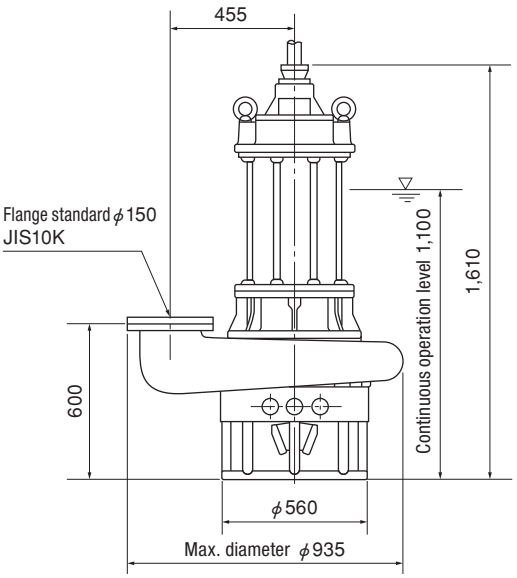

SN

Submersible Sand Pump
(4 or 6 Poles Motor)

Bore : **200 mm (8")**

Output: **37 kW (50 HP)**

Standard Specifications

Bore mm	Pump Model		Output kW (HP)	Phase	Capacity - Total Head m³/min-m		No. of poles P	Weight (Bare Pump) kg	
	With an agitator type	Water-jet agitation type			50Hz	60Hz		With an agitator type	Water-jet agitation type
200 (8")	SN851A	SN851J	37 (50)	3-ph	6.0–19	6.0–19	6	785	815

For the characteristics of the motor, bearing and oil, please refer to the specifications (detail data) - App.1.

Standard Accessories

- Cable (10m) ..... 1 pc.

Part Specifications

Applicable Model	Cable Specifications				Starting Method	Mechanical Seal	
	Type	Section Area (mm²)	Cores	Outer Dia. (mm)		Lower	Upper
SN851A (J)	2PNCT	30 14 0.75	6 1 3 } 10	φ41.3	Star-delta	Cemented carbide /Cemented carbide	SiC/SiC

Performance Curves

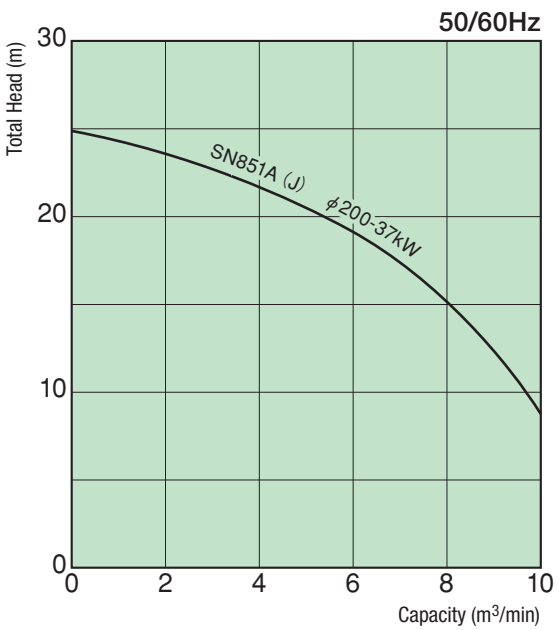

Dimensions

Unit: mm

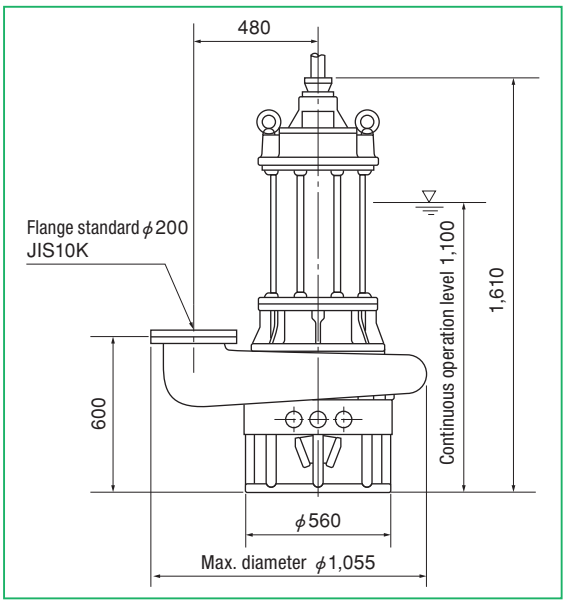

Sectional View

SN48E

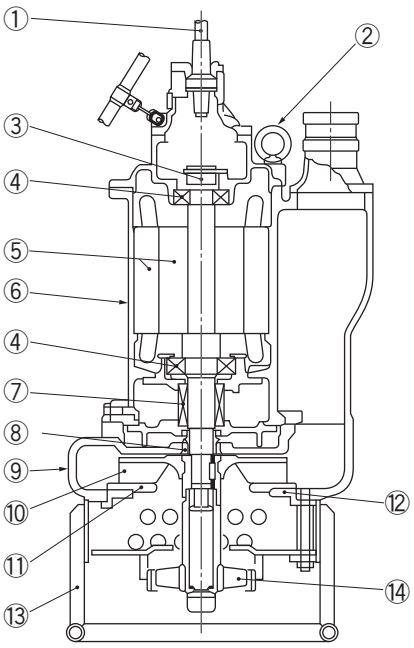

No.	Name	Material
1	Cable	2RNCT
2	Eyebolt	S45C
3	Thermal Protector	–
4	Ball Bearing	–
5	Motor	Shaft: SUS420J2
6	Stator Casing	FC200
7	Mechanical Seal	–
8	Ring	High-chrome cast iron
9	Pump Casing	FC250
10	Impeller	High-chrome cast iron
11	Suction Cover Base	SS400
12	Suction Cover	FC200
13	Strainer	SS330
14	Agitator	High-chrome cast iron

* Note **VCT** : Polyvinyl-chloride sheathed cabtyre cable **2PNCT** : Chloroprene sheathed cabtyre cable **SUS** : Stainless steel
SCS : Stainless steel casting **SS** : Mild steel **SPCC** : Steel **FC** : Gray iron casting **FCD** : Ductile iron casting **NBR** : Nitryl rubber