Dry Pit Pump (Screw Impeller)

Bore: 65 - 150 mm (2 1/2" - 6")
Output: 1.5 - 22 kW (2 - 30 HP)

CWT

The CWT series is a dry installation pump. Since its design is based on a submersible pump, it remains operatable, even if immersed in water. This pump can achieve a higher discharge head when connected in series with a submersible pump, making it suitable for use at a transfer-pumping station.

Bore mm (inch)	Output kW (HP)	Model	Page
65 (2 1/2")	1.5 (2)	CWT65	214
80 (3")	2.2・3.7 (3・5)	CWT80	
100 (4")	5.5・7.5 (7.5 ・10)	CWT100	
150 (6")	11-22 (15-30)	CWT150	216

CWT

Dry Pit Pump (Screw Impeller)

Bore : **65 - 150 mm (2 1/2 - 6")**

Output: **1.5 - 22 kW (2 - 30 HP)**

Features

● **Adopts an air-cooled submersible motor**

A dry-type air-cooled submersible motor is adopted. The very simple water jacket-less structure facilitates maintenance and inspection. A larger and more efficient motor significantly cuts the emitted heat and reduces the thermal degradation of bearing grease, O-rings, and mechanical seals.

● **Excellent pass-through capability**

The screw type impeller, can transfer water containing plastics and fibers. The screwing effect at the impeller entry enables the transfer of high-viscosity sludge.

● **Extended service life**

The shaft seal mechanism is equipped with a reliable double mechanical seal to extend its service life.

● **Operatable in water**

The pump, which is designed to be submersible and remains operatable, even if immersed in water.

● **Replaceable to land pump**

It can replace a land pump without any construction work.

Standard Specifications

Installation Environment	Ambient Temperature	-20 - 40°C
	Ambient Humidity	0 - 100%
Handling Liquid	Liquid Type	Wastewater and sewage containing sludge
	Temperature	0 - 60°C
Material	Cable (For power)	VCT: 7.5 kW or less, 2PNCT: 11 kW or more
	Motor Shaft	SUS420J2
	Pump Casing	FC250
	Impeller	FC250 (CWT150, and FCD500 for 22kW)
Electric Motor	Name	Air-filled type submersible induction motor
	Insulation Class	Class E
	Enclosure	IP68
	Phase	3-ph
	Voltage	200 - 480V

Applications

◯ Sewage treatment plant and Septic tank
Wastewater
Raw water
Sludge

◯ Factory
Industrial wastewater, cooling water

◯ Others
Pumping station
Rainwater, etc.

Special Specifications

Cable Extension	Cable lengths: 10 - 30m (every 5m)
Material Changes	Impeller: SCS13 (Stainless steel casting) Base Cover: SCS13 (Stainless steel casting)
Others	• Availability of mounting leakage detector, please refer to the specifications (detail data) - App.1. • For specifications other than the above, please contact us.

Pump-Related Product

◯ Liquid Level Control Switch

Level Regulator ⇨ See page 370
Mini Switch ⇨ See page 372
Oval Float ⇨ See page 373

Performance Curves

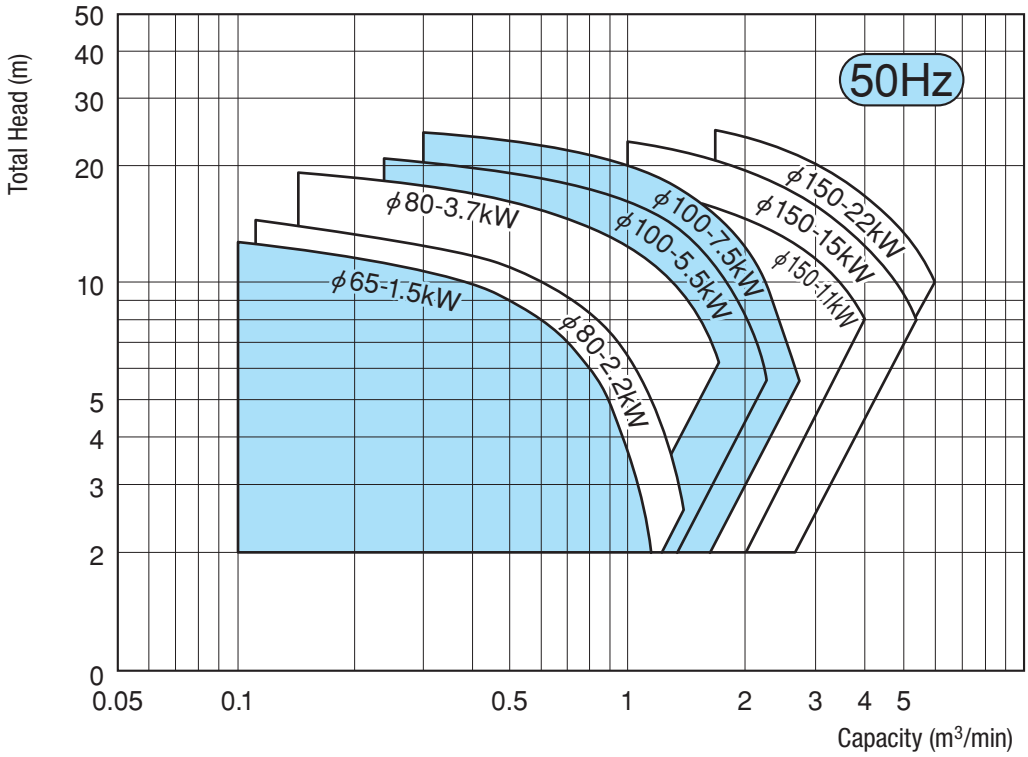

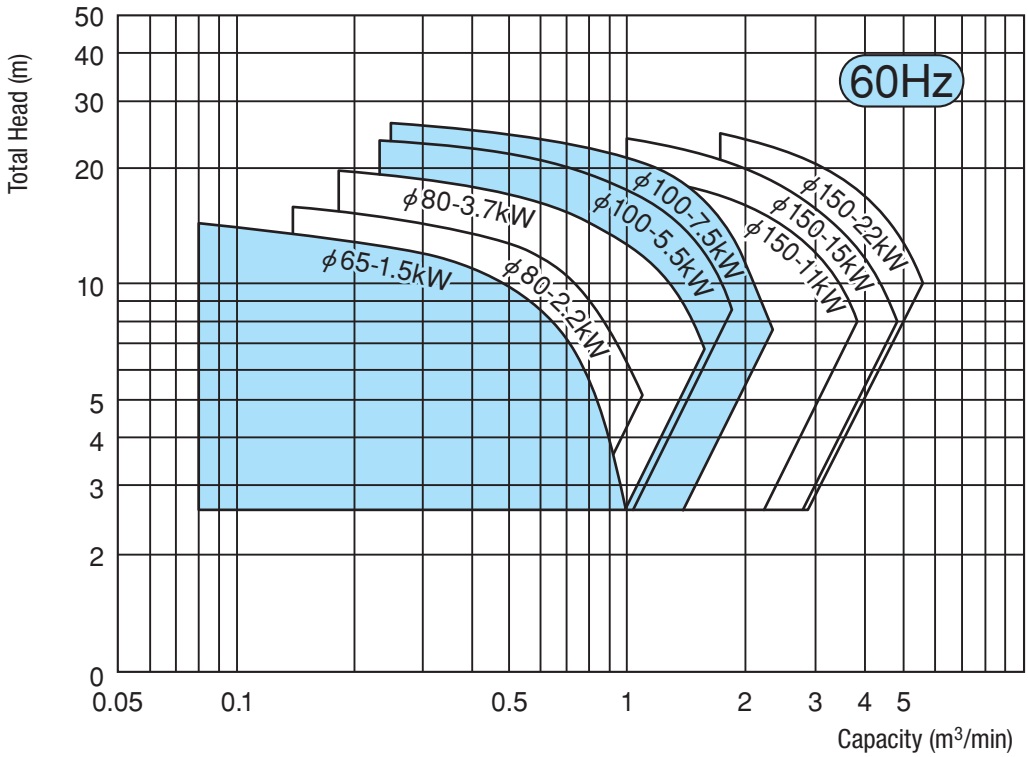

CWT

Dry Pit Pump (Screw Impeller)

Bore : **65 - 100 mm (2 1/2 - 4")**

Output: **1.5 - 7.5 kW (2 - 10 HP)**





CWT80

Standard Specifications

Bore mm (inch)		Pump Model	Output kW (HP)	Phase	Capacity - Total Head m^3/min-m		No. of poles P	Weight (Bare Pump) kg
Discharge	Suction				50Hz	60Hz		
65 (2 1/2")	80 (3")	CWT65	1.5 (2)	3-ph	0.65– 7.3	0.57– 8.9	4	130
80 (3")	100 (4")	CWT80	2.2 (3)	3-ph	0.79– 8.3	0.75– 9.6	4	205
			3.7 (5)		1.11–11.4	1.10–11.7		230
100 (4")	125 (5")	CWT100	5.5 (7.5)	3-ph	1.40–13.4	1.36–14.4	4	275
			7.5 (10)		1.70–15.0	1.50–17.2		300

For motor characteristics, bearings and oils, see the specifications (detail data) - App.1.

Standard Accessories

- Cable (8 m) ..... 2 pcs.
- Stand (Suction pipe) ..... 1 set

Part Specifications

Applicable Model	Output kW (HP)	Cable Specification					Starting Method	Mechanical Seal		Solid Passage Dia. (Soft Solid) (mm)	
		Type	Section Area (mm^2)	Cores	Outer Dia. (mm)	Number of Cables		Upper	Lower	50Hz	60Hz
CWT65	1.5 (2)	VCT	1.25	4	ϕ 11.5	1	Direct	SiC/SiC	SiC/SiC	73	34
		2PNCT	1.25	2	ϕ 9.8	1					
CWT80	2.2 (3)	VCT	1.25	4	ϕ 11.5	1				49	42
		2PNCT	1.25	2	ϕ 9.8	1					
	3.7 (5)	VCT	2.0	4	ϕ 12.0	1				53	48
		2PNCT	1.25	2	ϕ 9.8	1					
CWT100	5.5 (7.5)	VCT	3.5	4	ϕ 14.0	1				54	48
		2PNCT	1.25	2	ϕ 9.8	1					
	7.5 (10)	VCT	5.5	4	ϕ 16.5	1				56	49
		2PNCT	1.25	2	ϕ 9.8	1					

Performance Curves

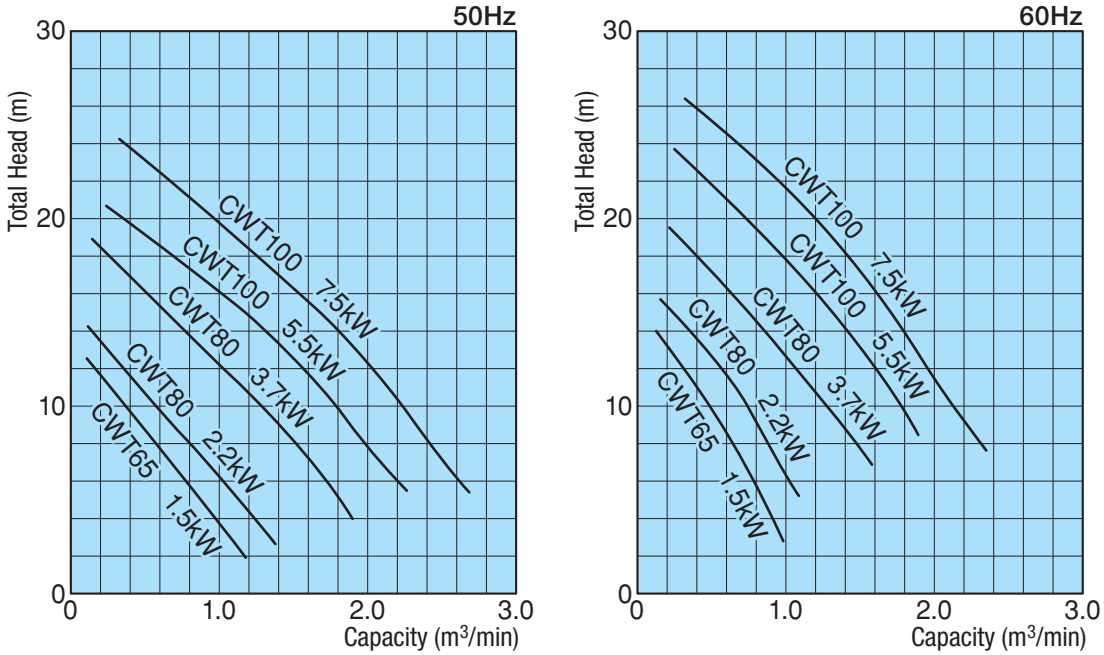

Dimensions

Unit: mm

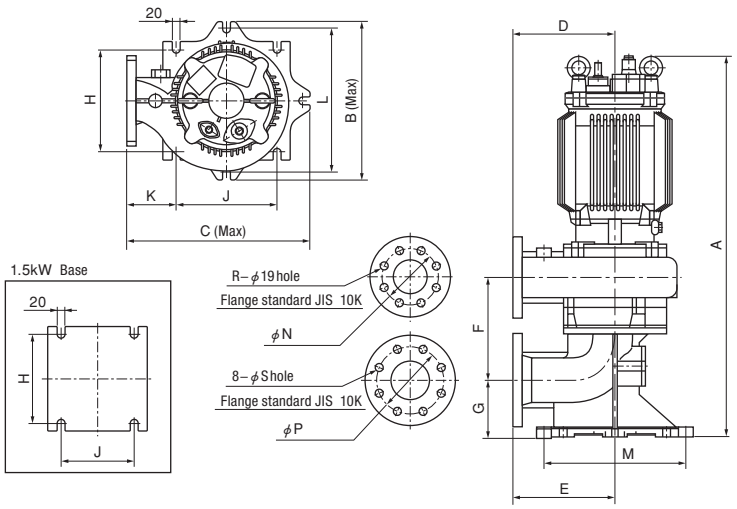

Pump Model	Output kW (HP)	A	B	C	D	E	F	G	H	J	K	L	M	N	P	R	S
CWT 65	1.5 (2)	865	288	354	210	180	273	130	230	195	110	—	—	140	150	4	19
CWT 80	2.2 (3)	920	410	470	265	265	270	145	270	270	130	380	380	150	175	8	
	3.7 (5)	995															
CWT 100	5.5 (7.5)	1,050	423											175	210		23
	7.5 (10)	1,110															

CWT

Dry Pit Pump (Screw Impeller)

Bore : **150 mm (6")**

Output: **11 - 22 kW (15 - 30 HP)**





CWT150

Standard Specifications

Bore mm (inch)		Pump Model	Output kW (HP)	Phase	Capacity - Total Head m³/min-m		No. of poles P	Weight (Bare Pump) kg
Discharge	Suction				50Hz	60Hz		
150 (6")	200 (8")	CWT150	11 (15)	3-ph	3.0–11.5	2.9–12.3	4	550
			15 (20)		3.7–14.0	3.3–14.3		610
			22 (30)		4.0–16.9	3.7–18.1		680

For motor characteristics, bearings and oils, see the specifications (detail data) - App.1.

Standard Accessories

- Cable (8 m) ..... 3 pcs.
- Stand (Suction pipe) ..... 1 set

Part Specifications

Applicable Model	Output kW (HP)	Cable Specification					Starting Method	Mechanical Seal		Solid Passage Dia. (Soft Solid) (mm)	
		Type	Section Area (mm²)	Cores	Outer Dia. (mm)	Number of Cables		Upper	Lower	50Hz	60Hz
CWT150	11 (15)	2PNCT	5.5 5.5 1.25	4 3 2	ϕ17 ϕ15.5 ϕ 9.8	1	Direct	SiC/SiC	SiC/SiC	76	76
	15 (20)	2PNCT	8.0 8.0 1.25	4 3 2	ϕ18.5 ϕ17 ϕ 9.8	1				80	76
	22 (30)	2PNCT	14.0 14.0 1.25	4 3 2	ϕ22 ϕ20 ϕ 9.8	1				80	78

Performance Curves

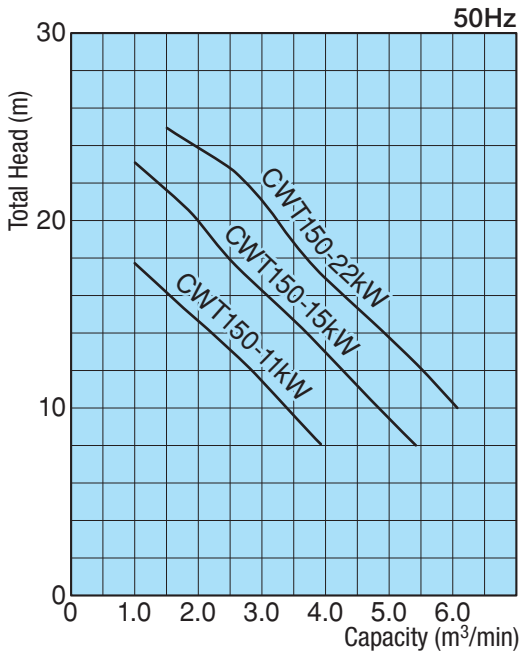

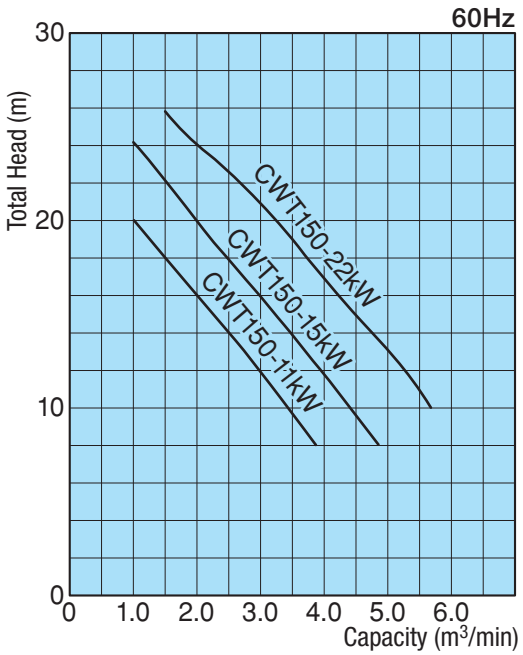

Dimensions

Unit: mm

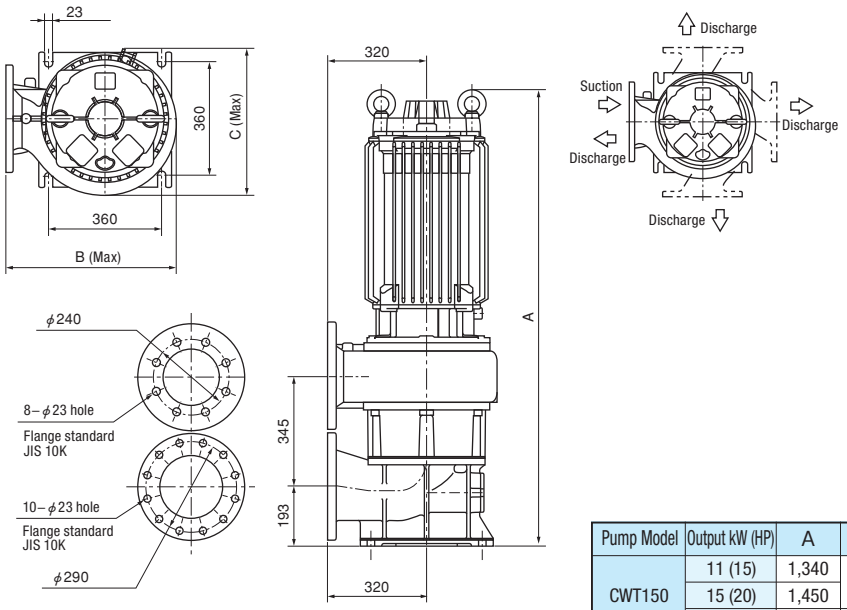

Pump Model	Output kW (HP)	A	B	C
CWT150	11 (15)	1,340	550	470
	15 (20)	1,450		
	22 (30)	1,550	570	500

CWT Dry Pit Pump (Screw Impeller)

Sectional View

CWT80

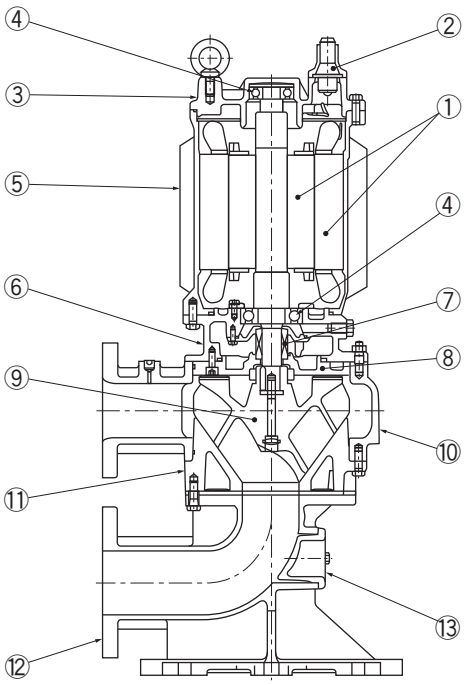

No.	Name	Material
1	Motor	–
2	Cable	VCT
3	Motor Cover	FC200
4	Ball Bearing	–
5	Stator Casing	FC200
6	Oil Casing	FC200
7	Mechanical Seal	SiC/SiC
8	Mechanical Seal Bracket	FC250
9	Impeller	FC250
10	Pump Casing	FC250
11	Base Cover	FC250
12	Stand	FC200
13	Inspection Lid	FC200

CWT150

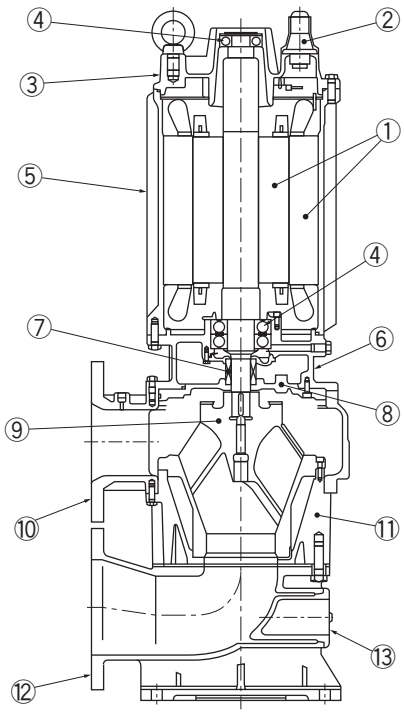

No.	Name	Material
1	Motor	–
2	Cable	2PNCT
3	Motor Cover	FC200
4	Ball Bearing	–
5	Stator Casing	FC200
6	Oil Casing	FC200
7	Mechanical Seal	SiC/SiC
8	Mechanical Seal Bracket	FC250
9	Impeller (11 or 15 kW)	FC250
	Impeller (22 kW)	FCD500
10	Pump Casing	FC250
11	Pump Stand	FC200
12	Stand	FC200
13	Inspection Lid	FC200

* Note **VCT** : Polyvinyl-chloride sheathed cabtyre cable **2PNCT** : Chloroprene sheathed cabtyre cable **SUS** : Stainless steel
SCS : Stainless steel casting **SS** : Mild steel **SPCC** : Steel **FC** : Gray iron casting **FCD** : Ductile iron casting **NBR** : Nitryl rubber