Dry Pit Pump (Non-clog Impeller)

Bore: 65 - 150 mm (2 1/2" - 6")
Output: 1.5 - 22 kW (2 - 30 HP)

CNT

The CNT series is a dry installation pump. Since its design is based on a submersible pump, it remains operatable, even if immersed in water.
The CNT series can achieve higher discharge head when connected in series with CN-P, making it suitable for use at a transfer-pumping station.

Bore mm (inch)	Output kW (HP)	Model	Page
65 (2 1/2")	1.5 (2)	**CNT651**	142
80 (3")	2.2・3.7 (3・5)	**CNT801**	
100 (4")	5.5・7.5 (7.5 ・10)	**CNT1001**	
150 (6")	11・15・22 (15・20・30)	**CNT1501**	144
	6・11 (50Hz) (8・15) 6.5・13 (60Hz) (9 ・17.5)	**CNT150B**	146

CNT

Dry Pit Pump
(Non-clog Impeller)

Bore : **65 - 150 mm (2 1/2 - 6")**
Output: **1.5 - 22 kW (2 - 30 HP)**

Features

● **Adopts an air-cooled submersible motor (except for CNT150B)**
A dry-type air-cooled submersible motor is adopted. The water jacket-less structure is very simple and facilitates maintenance and inspection. A larger and more efficient motor significantly cuts the emitted heat and reduces the thermal degradation of bearing grease, O-rings, and mechanical seals.

● **Non-clogging impeller**
Equipped with a single-vane, non-clogging closed impeller eliminates clogging and facilitates the transfer of water containing solids.

● **Extended service life**
The shaft seal mechanism is equipped with a reliable double mechanical seal to extend the service life.

● **Operatable in water**
The pump, which is designed to be submersible and remains operatable, even if immersed in water.

● **Replaceable to land pump**
It can replace a land pump without any construction work.

Applications

○ Sewage treatment plant and Septic tank
Wastewater
Raw water
Sludge

○ Factory
Industrial wastewater, cooling water

○ Others
Pumping station
Rainwater, etc.

Special Specifications

Cable Extension	Cable lengths: 10 - 30m (every 5m)
Material Changes	Impeller: SCS13 (Stainless steel casting) Base Cover: SCS13 (Stainless steel casting)
Others	• Availability of mounting leakage detector, please refer to the specifications (detail data) - App.1. • For specifications other than the above, please contact us.

Standard Specifications

Installation Environment	Ambient Temperature	-20 - 40°C
	Ambient Humidity	0 - 100%
Handling Liquid	Kind of Liquid	Wastewater, sewage containing sludge
	Temperature	0 - 60°C (0 - 40°C for CNT150B)
Material	Cable	VCT (CNT1501, CNT150B and 2PNCT)
	Motor Shaft	SUS420J2
	Pump Casing	FC250 (FC200 for CNT150B)
	Impeller	FC200 (7.5 kW or more and CNT150B) FC250 (11 kW or more) FCD500 (22 kW)
Electric Motor	Name	Air-filled type Submersible Induction Motor
	Insulation Class	Class E (Class F for CNT150B)
	Enclosure	IP68
	Phase	3-ph
	Voltage	200 - 480V

Pump-Related Product

○ Liquid Level Control Switch
Level Regulator ⇨ See page 370
Mini Switch ⇨ See page 372
Oval Float ⇨ See page 373

Performance Curves

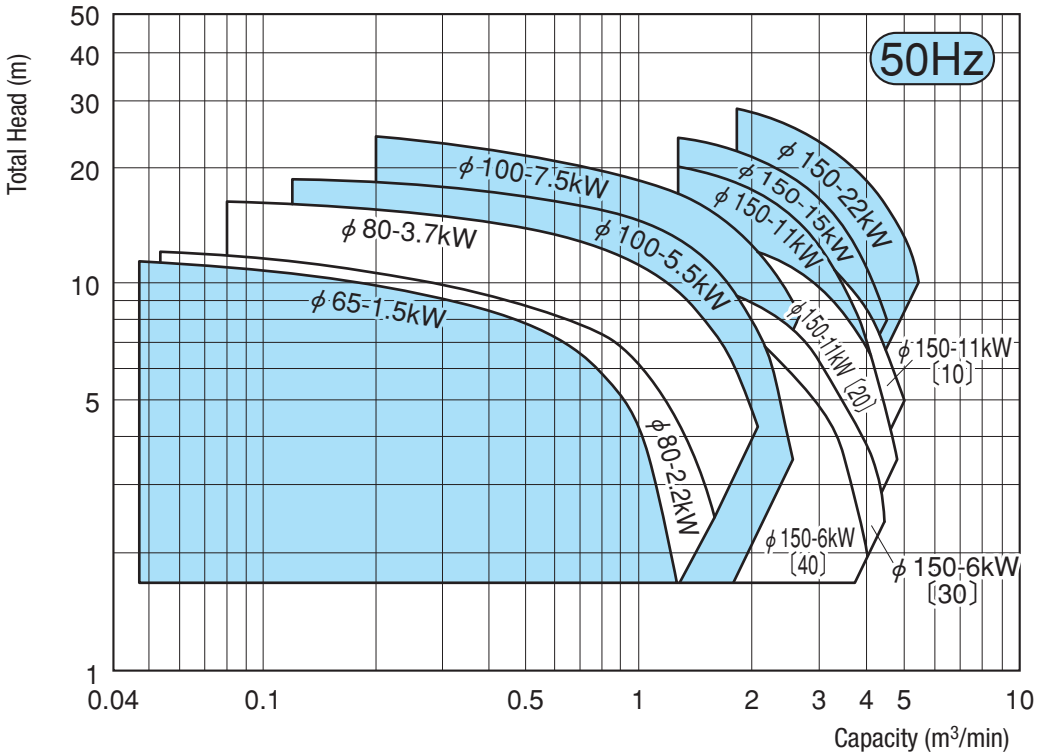

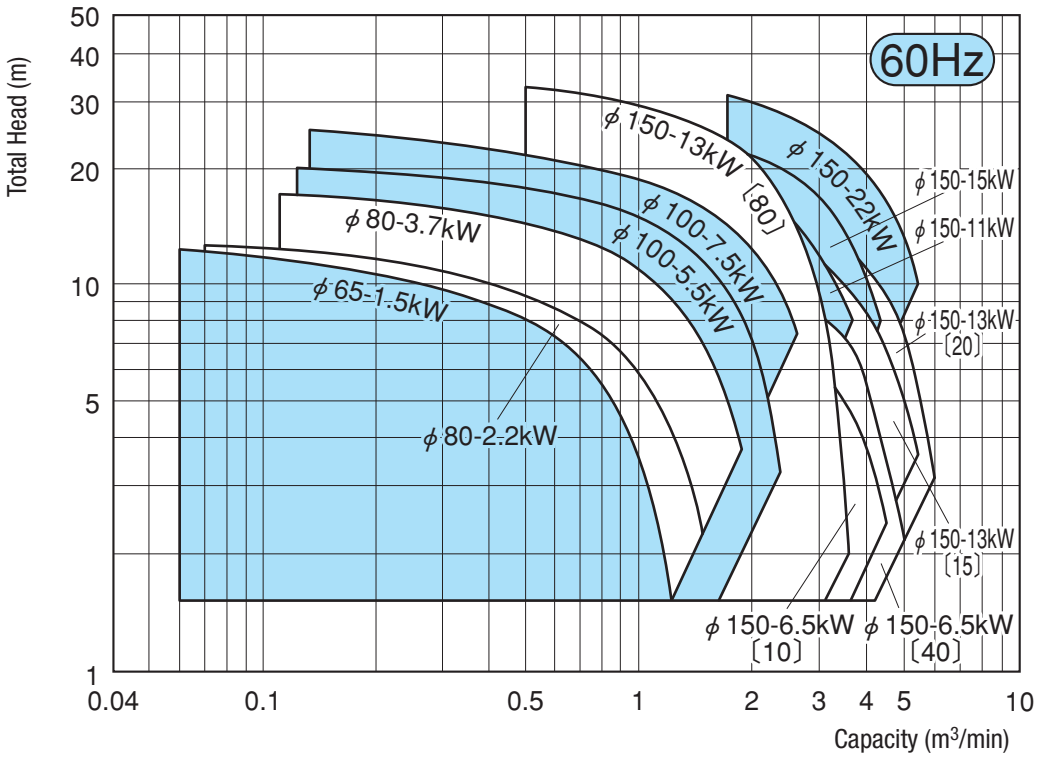

CNT

Dry Pit Pump
(Non-clog Impeller)

Bore : **65 - 150 mm (2 1/2 - 6")**

Output: **1.5 - 7.5 kW (2 - 10 HP)**





CNT801

Standard Specifications

Bore mm (inch)		Pump Model	Output kW (HP)	Phase	Capacity - Total Head m^3/min-m		No. of poles P	Weight (Bare Pump) kg
Discharge	Suction				50Hz	60Hz		
65 (2 1/2")	80 (3")	CNT651	1.5 (2)	3-ph	0.75–6.5	0.65–7.0	4	130
80 (3")	100 (4")	CNT801	2.2 (3)	3-ph	0.90–6.7	0.84–7.1	4	205
			3.7 (5)		1.18–10.1	1.14–9.9		230
100 (4")	125 (5")	CNT1001	5.5 (7.5)	3-ph	1.50–11.6	1.49–11.6	4	275
			7.5 (10)		1.79–14.0	1.70–14.5		300

For motor characteristics, bearings and oils, see the specifications (detail data) - App.1.

Standard Accessories

- Cable (8 m) ..... 2 pcs.
- Stand (Suction pipe) ..... 1 set

Part Specifications

Applicable Model		Cable Specification					Starting Method	Mechanical Seal		Solid Passage Dia. (Soft Solid) (mm)	
		Type	Section Area (mm^2)	Cores	Outer Dia. (mm)	Number of Cables		Upper	Lower	50Hz	60Hz
CNT651	1.5kW (2 HP)	VCT	1.25	4	ϕ 11.5	1	Direct	SiC/SiC	SiC/SiC	56	56
		2PNCT	1.25	2	ϕ 9.8	1					
CNT801	2.2kW (3 HP)	VCT	1.25	4	ϕ 11.5	1				70	70
		2PNCT	1.25	2	ϕ 9.8	1					
CNT801	3.7kW (5 HP)	VCT	2.0	4	ϕ 12.0	1				70	70
		2PNCT	1.25	2	ϕ 9.8	1					
CNT1001	5.5kW (7.5 HP)	VCT	3.5	4	ϕ 14.0	1				70	70
		2PNCT	1.25	2	ϕ 9.8	1					
CNT1001	7.5kW (10 HP)	VCT	5.5	4	ϕ 16.5	1				70	70
		2PNCT	1.25	2	ϕ 9.8	1					

Performance Curves

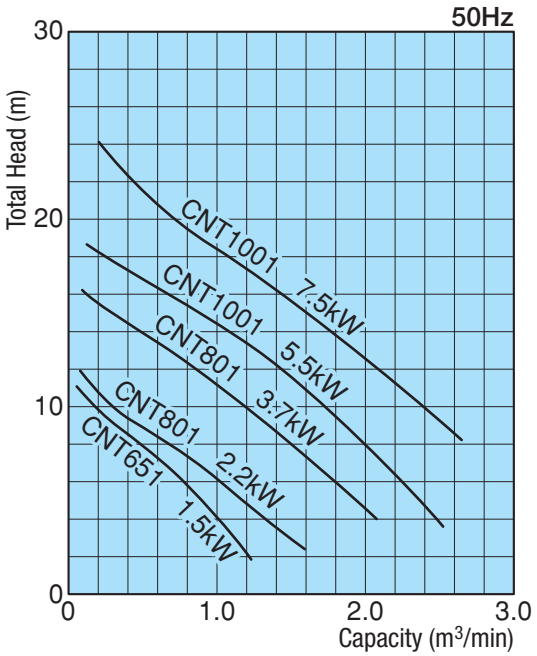

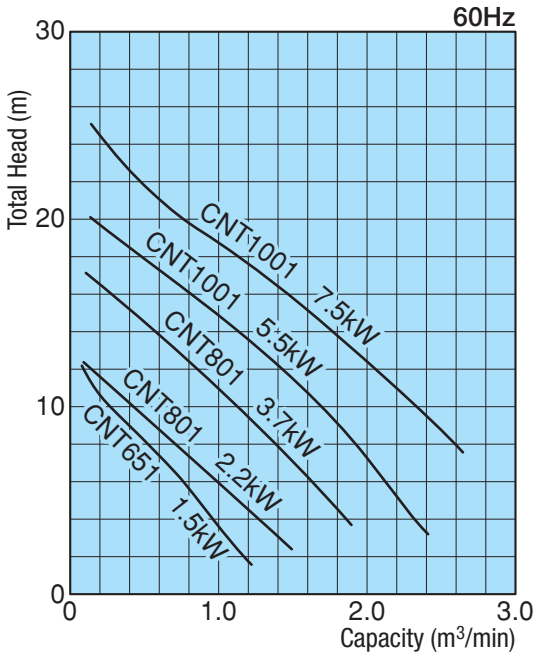

Dimensions

Unit: mm

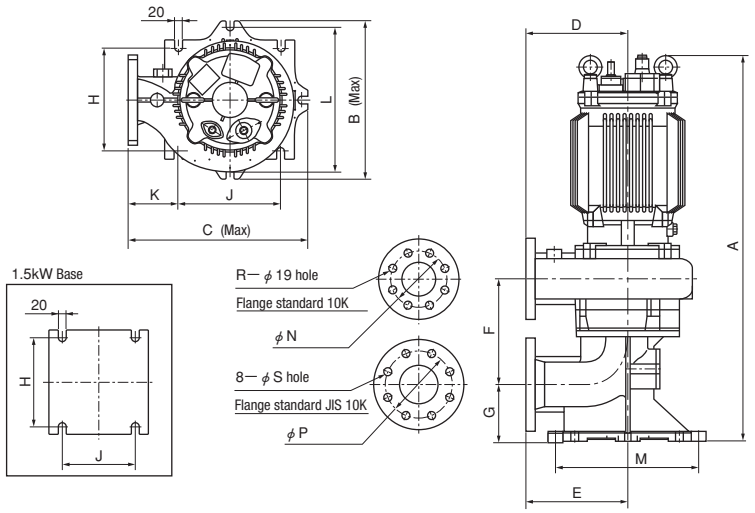

Pump Model	Output kW (HP)	A	B	C	D	E	F	G	H	J	K	L	M	N	P	R	S
CNT651	1.5 (2)	865	288	354	210	180	273	130	230	195	110	—	—	140	150	4	19
CNT801	2.2 (3)	920	410	470	265	265	270	145	270	270	130	380	380	150	175	8	
	3.7 (5)	995															
CNT1001	5.5 (7.5)	1,050	423											175	210		23
	7.5 (10)	1,110															

CNT

Dry Pit Pump
(Non-clog Impeller)

Bore : **150 mm (6")**

Output: **11 - 22 kW (15 - 30 HP)**





CNT1501

Standard Specifications

Bore mm (inch)		Pump Model	Output kW (HP)	Phase	Capacity - Total Head m³/min-m		No. of poles P	Weight (Bare Pump) kg
Discharge	Suction				50Hz	60Hz		
150 (6")	200 (8")	CNT1501	11 (15)	3-ph	2.5–15.0	2.5–15.2	4	550
			15 (20)		2.9–17.0	2.9–16.8		610
			22 (30)		3.5–21.2	3.4–22.7		680

For motor characteristics, bearings and oils, see the specifications (detail data) - App.1.

Standard Accessories

- Cable (8 m) ..... 3 pcs.
- Stand (Suction pipe) ..... 1 set

Part Specifications

Applicable Model		Cable Specification					Starting Method	Mechanical Seal		Solid Passage Dia. (Soft Solid) (mm)	
		Type	Section Area (mm²)	Cores	Outer Dia. (mm)	Number of Cables		Upper	Lower	50Hz	60Hz
CNT1501	11kW (15 HP)	2PNCT	05.5	4	ϕ17	1	Star-delta	SiC/SiC	SiC/SiC	64	57
			05.5	3	ϕ15.5	1					
			1.25	2	ϕ 9.8	1					
CNT1501	15kW (20 HP)	2PNCT	08.0	4	ϕ18.5	1				70	62
			08.0	3	ϕ17	1					
			1.25	2	ϕ 9.8	1					
CNT1501	22kW (30 HP)	2PNCT	14.0	4	ϕ22	1				76	67
			14.0	3	ϕ20	1					
			1.25	2	ϕ 9.8	1					

Performance Curves

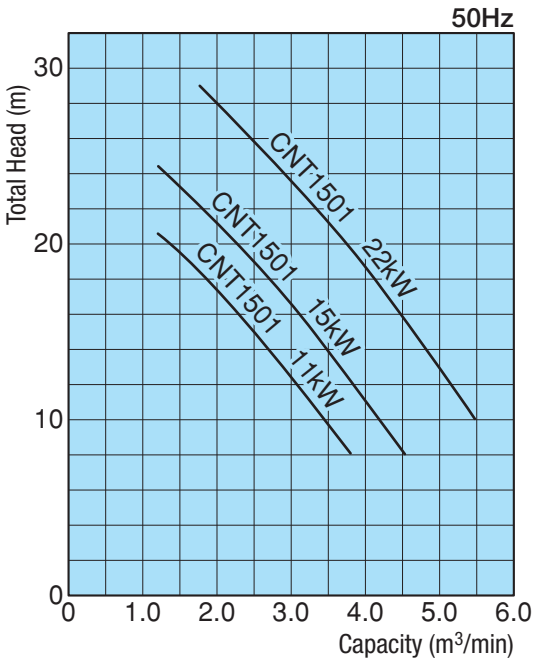

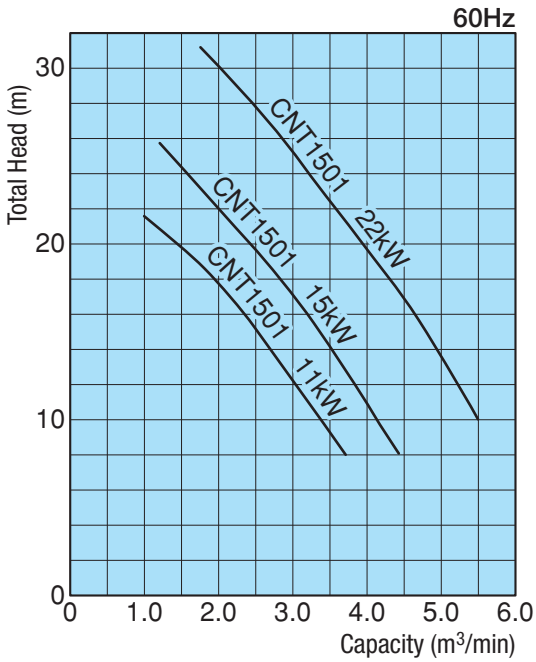

Dimensions

Unit: mm

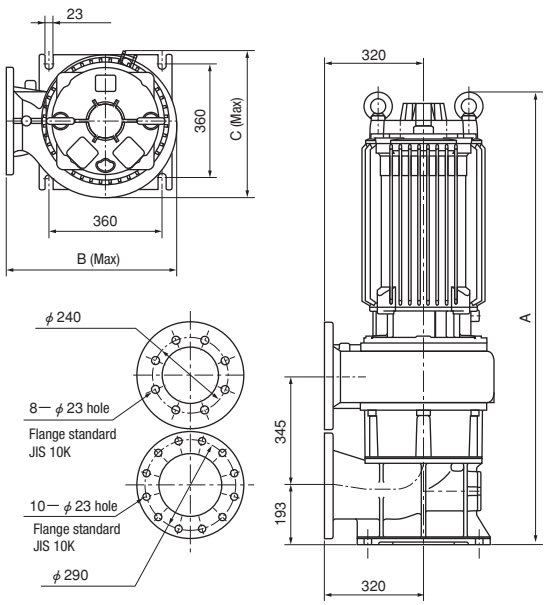

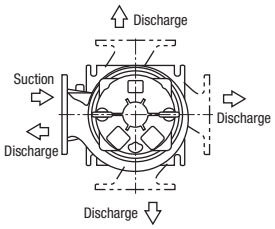

Output kW (HP)	A	B	C
11 (15)	1,340	550	470
15 (20)	1,450		
22 (30)	1,550	570	500

CNT

Dry Pit Pump
(Non-clog Impeller)

Bore : **150 mm (6")**

Output: **6 - 13 kW (8 - 17.5 HP)**





CNT150B

Standard Specifications

Bore mm (inch)	Pump Model	Output kW (HP)		Phase	Capacity - Total Head m^3/min-m		No. of poles P	Weight (Bare Pump) kg
		50Hz	60Hz		50Hz	60Hz		
150 (6")	CNT150B	6.0 (8)	6.5 (9)	3-ph	[40] 2.5– 6.0	[10] 2.8– 6.8	6	230
					[30] 2.5– 7.7	[40] 2.8– 8.8		
		11 (15)	13 (17.5)		[20] 2.5–11.0	[15] 2.8–11.8	4	
						[20] 2.8–14.8		
					[10] 2.5–13.5	[80] 1.8–22.8		

For motor characteristics, bearings and oils, see the specifications (detail data) - App.1.

[ ] Impeller No.

Standard Accessories

- Cable (16m・6/6.5 kW) ..... 1 pcs.
  (16m・11/13kW) ..... 2 pcs.
- Stand ..... 1 set
- Suction Pipe ..... 1 pcs.

Part Specifications

Applicable Model		Cable Specification				Starting Method Lower	Mechanical Seal	
		Type	Section Area (mm^2)	Cores	Outer Dia. (mm)		Lower	Upper
CNT150B	6/6.5kW (8/9 HP)	2PNCT	8.0	4	ϕ 18.5	Direct	Cemented Carbide/ Cemented Carbide	Carbon/Cemented Carbide
CNT150B	11/13kW (15/17.5 HP)					Star-delta		

Performance Curves

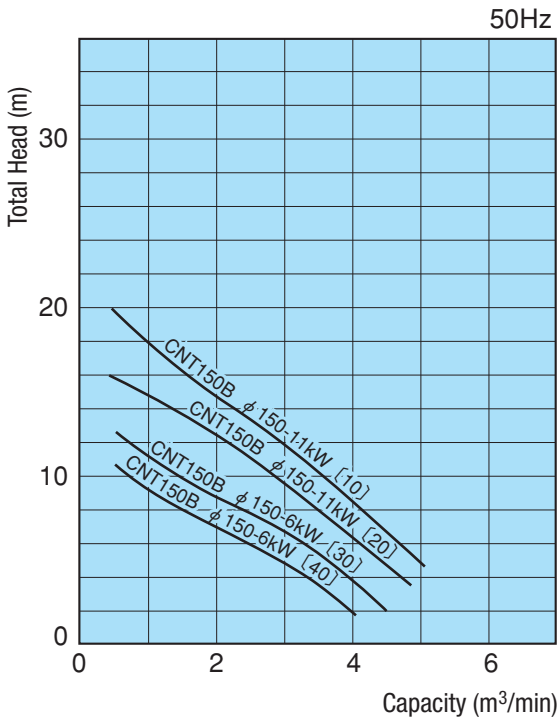

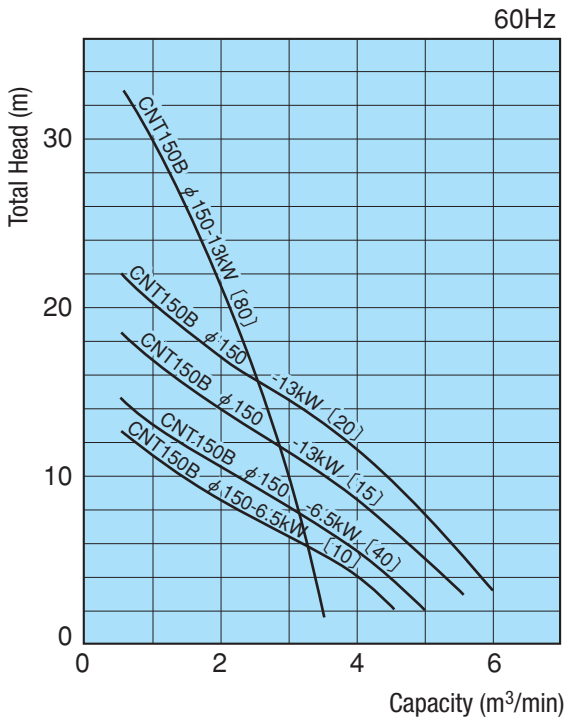

Dimensions

Unit: mm

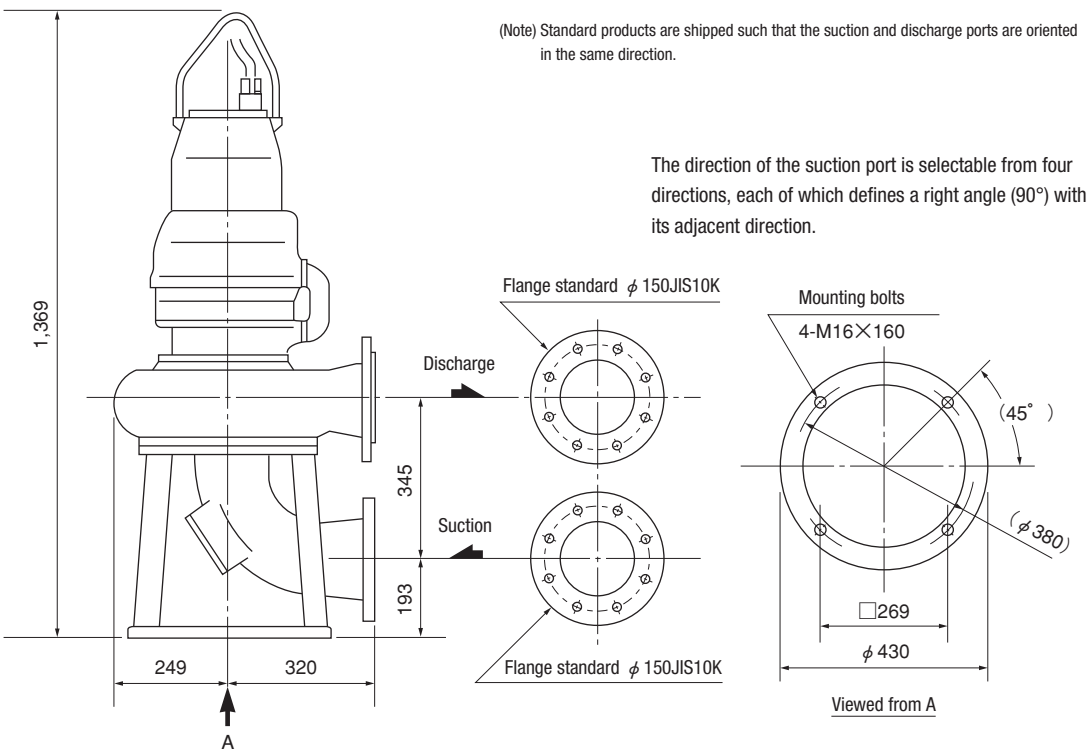

(Note) Standard products are shipped such that the suction and discharge ports are oriented in the same direction.

The direction of the suction port is selectable from four directions, each of which defines a right angle (90°) with its adjacent direction.

CNT Dry Pit Pump (Non-clog Impeller)

Sectional View

CNT801

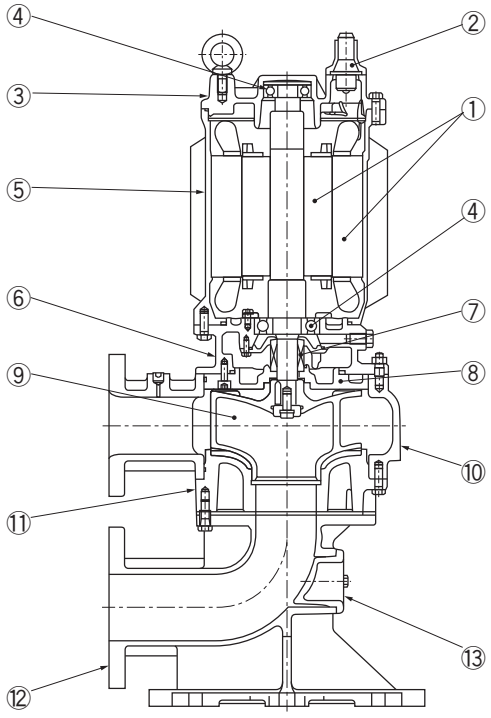

No.	Name	Material
1	Motor	–
2	Cable	VCT
3	Motor Cover	FC200
4	Ball Bearing	–
5	Stator Casing	FC200
6	Oil Casing	FC200
7	Mechanical Seal	SiC/SiC
8	Mechanical Seal Bracket	FC250
9	Impeller	FC200
10	Pump Casing	FC250
11	Base Cover	FC250
12	Stand	FC200
13	Inspection Lid	FC200

CNT1501

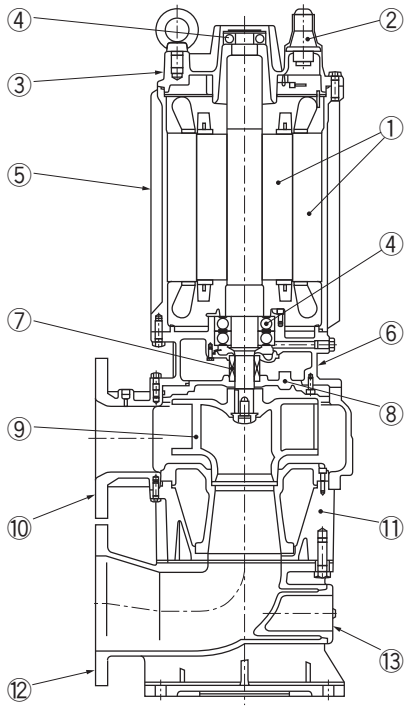

No.	Name	Material
1	Motor	–
2	Cable	2PNCT
3	Motor Cover	FC200
4	Ball Bearing	–
5	Stator Casing	FC200
6	Oil Casing	FC200
7	Mechanical Seal	SiC/SiC
8	Mechanical Seal Bracket	FC250
9	Impeller (11 or 15 kW)	FC250
	Impeller (22 kW)	FCD500
10	Pump Casing	FC250
11	Pump Stand	FC200
12	Suction Stand	FC200
13	Inspection Lid	FC200

* Note **VCT** : Polyvinyl-chloride sheathed cabtyre cable **2PNCT** : Chloroprene sheathed cabtyre cable **SUS** : Stainless steel
SCS : Stainless steel casting **SS** : Mild steel **SPCC** : Steel **FC** : Gray iron casting **FCD** : Ductile iron casting **NBR** : Nitryl rubber

Sectional View

CNT150B

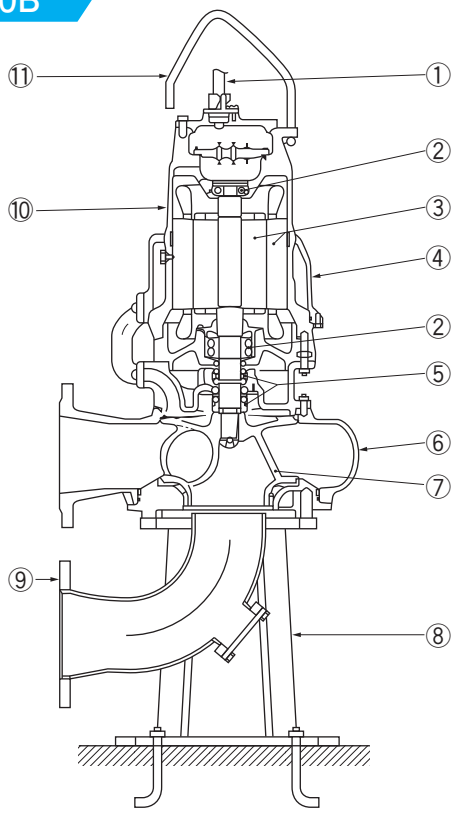

No.	Name	Material
1	Cable	2PNCT
2	Ball Bearing	–
3	Motor	–
4	Outer Casing	FC200
5	Mechanical Seal	–
6	Pump Casing	FC200
7	Impeller	FC200
8	Stand	SS400
9	Curved Suction Pipe	SS400
10	Stator Casing	FC200
11	Handle	SS400

* Note **VCT** : Polyvinyl-chloride sheathed cabtyre cable **2PNCT** : Chloroprene sheathed cabtyre cable **SUS** : Stainless steel
SCS : Stainless steel casting **SS** : Mild steel **SPCC** : Steel **FC** : Gray iron casting **FCD** : Ductile iron casting **NBR** : Nitryl rubber